Features

- **Frequencies up to 1 MHz**
- **Totals stored in non-volatile RAM**
- **Inputs from NPN or PNP proximity switches, contact closures, digital logic, magnetic pickups down to 12 mV, or AC inputs up to 250 Vac.**
- **Up counting from zero to preset value using positive scale factor**
- **Down counting from preset to zero using negative scale factor**
- **Universal AC power, 85-264 Vac**
- **Isolated 5, 10 or 24 Vdc excitation supply to power sensors**
- **NEMA 4X, 1/8 DIN case**
- **Optional serial I/O: Ethernet, USB, RS232, RS485, Ethernet-to-RS485 converter**
- **Optional relay outputs: dual or quad relays, contact or solid state**
- **Optional isolated analog output: 4-20 mA, 0-20 mA, 0-10V, -10 to +10V**
- **Optional low voltage power: 10-48 Vdc or 12-32 Vac**
- **Optional Extended Counter: all capabilities of Standard counter, plus**
  - **Channel A total and Channel B rate simultaneously**
  - **Up/down counting on Ch A, using Ch B to control count direction**
  - **Counting on Ch A, using Ch B to inhibit counting**
  - **Arithmetic functions A+B, A-B, AxB, A/B, A/B-1 (draw)**

Description

The Laureate dual-channel up or down totalizer is a basic operating mode of the Laureate counter with the FR dual-channel signal conditioner board. Each channel (A or B) may be independently set up and scaled to count up from zero (or other value) to a preset limit, or to count down from a preset value to zero (or other limit). Countdown operation is set up by entering a negative scale factor.

The six-digit counter display is capable of displaying any value from -999,999 to 999,999 with a programmable decimal point. Scaling allows direct readout in engineering units, such as gallons or cubic feet based on counts from a turbine flow meter, or the count of cans based on the count of six-packs. The displayed channel (A or B) is selected via a front panel pushbutton. The totals are stored in non-volatile memory so as to be retained in the absence of power.

Dual or quad AC/DC relays can add on/off control capability tied to totals A and B.

An optional Extended counter version provides capabilities beyond those of the Standard counter:

- **Rate and total simultaneously.** Channel A can display total while Channel B displays rate. The selection of A or B for display is via a front panel pushbutton. This mode is ideal for flow applications.
- **Up/down counting.** Channel A can serve as an up/down counter, where the count direction is dynamically changed by applying a signal to Channel B. For instance, Channel A can count and scale pulses from a turbine flow meter, while Channel B inputs the direction of flow. This allows total volume to be tracked in case of reversible flow.
- **Totalizing with external inhibit.** Totalizing by Channel A can be temporarily inhibited by applying a signal to Channel B. For instance, 60 Hz AC pulses can be counted by Channel A and be scaled to display elapsed hours. A signal can be applied to Channel B to start or stop pulse counting when a process is in operation.
- **Custom curve linearization.** Exceptionally accurate custom curve linearization is achievable, for example to linearize the low end of turbine flow meters. For setup, up to 180 data points can be input into a spreadsheet or text file by the user. The computer then calculates spline fit segments, which are downloaded into the meter via RS-232. The linearized rate can then be totalized by the Extended counter.
- **Arithmetic functions.** The Extended counter makes arithmetic functions available, namely A+B, A-B, AxB, A/B and A/B-1. These solve many applications. For instance, A+B allows two input flows to be summed for total volume, while A-B allows outflow to be subtracted from inflow for net volume. A/B allows the mixing of ingredients in a specified ratio. By monitoring and alarming the A/B volume ratio, ingredient B can be added to A until the proper ratio is achieved.

Inputs to the FR dual-channel signal conditioner can be proximity switches with PNP or NPN output, TTL or CMOS logic, magnetic pickups, contact closures, low-level outputs from turbine flow meters down to 12 mV, and high-level AC line inputs up to 250 Vac. A built-in isolated 5, 10, or 24 Vdc excitation supply can power proximity switches and other sensors, thus eliminating the need for an external power supply.

Designed for system use. Optional plug-in boards include Ethernet and other serial communication boards, dual or quad relay boards, and an isolated analog output board. Laureates may be powered from 85-264 Vac or optionally from 12-32 Vac or 10-48 Vdc. The display is available with red or green LEDs. The 1/8 DIN case meets NEMA 4X (IP65) specifications from the front when panel mounted. Any setup functions and front panel keys can be locked out for simplified usage and security. A built-in isolated 5, 10, or 24 Vdc excitation supply can power transducers and eliminate the need for an external power supply. All power and signal connections are via UL / VDE / CSA rated screw clamp plugs.

Specifications

Display	
Readout	6 LED digits, 7-segment, 14.2 mm (.56"), red or green.
Display Range	-999999 to +999999, XXXXEX notation beyond 999999
Zero Adjust	-999999 to +999999
Span Adjust	0 to 999999
Indicators	Four LED lamps
Inputs	
Types	AC, pulses from NPN, PNP transistors, contact closures, magnetic pickups.
Signal Ground	Common ground for channels A & B
Channel A Frequency	0.005 Hz to 1 MHz
Channel B Frequency	0.005 Hz to 250 kHz
Minimum Signal	Nine ranges from (-12 to +12 mV) to (+1.25 to +2.1V)
Maximum Signal	250 Vac
Noise Filter	1 MHz, 30 kHz, 250 Hz (selectable)
Contact Debounce	0, 3, 50 ms (selectable)
Update Rate	
Freq. Technique	Inverse period
Conversion Time	Gate time + 30 ms+ 0-2 signal periods
Gate Time	Selectable 10 ms to 199.99 s
Time Before Zero Out	Selectable 10 ms to 199.99 s
Accuracy	
Time Base	Crystal calibrated to ±2 ppm
Span Tempco	± 1 ppm/°C (typ)
Long-term Drift	± 5 ppm/year
Power	
Voltage, standard	85-264 Vac or 90-300 Vdc
Voltage, optional	12-32 Vac or 10-48 Vdc
Power frequency	DC or 47-63 Hz
Power consumption (typical, base meter)	1.2W @ 120 Vac, 1.5W @ 240 Vac, 1.3W @ 10 Vdc, 1.4W @ 20 Vdc, 1.55W @ 30 Vdc, 1.8W @ 40 Vdc, 2.15W @ 48 Vdc
Power isolation	250V rms working, 2.3 kV rms per 1 min test
Excitation Output (standard)	
5 Vdc	5 Vdc ± 5%, 100 mA
10 Vdc	10 Vdc ± 5%, 120 mA
24 Vdc	24 Vdc ± 5%, 50 mA
Output Isolation	50 Vdc to meter ground
Analog Output (optional)	
Output Levels	4-20 mA, 0-20 mA, 0-10V, -10 to +10V (single-output option) 4-20 mA, 0-20 mA, 0-10V (dual-output option)
Current compliance	2 mA at 10V (> 5 kΩ load)
Voltage compliance	12V at 20 mA (< 600Ω load)
Scaling	Zero and full scale adjustable from -99999 to +99999
Resolution	16 bits (0.0015% of full scale)
Isolation	250V rms working, 2.3 kV rms per 1 min test (dual analog outputs share the same ground)
Relay Outputs (optional)	
Relay Types	2 Form C contact relays or 4 Form A contact relays (NO) 2 or 4 Form A, AC/DC solid state relays (NO)
Current Ratings	8A at 250 Vac or 24 Vdc for contact relays 120 mA at 140 Vac or 180 Vdc for solid state relays
Output common	Isolated commons for dual relays or each pair of quad relays
Isolation	250V rms working, 2.3 kV rms per 1 min test

Serial Data I/O (optional)	
Board Selections	Ethernet, Ethernet-to-RS485 server, USB, USB-to-RS485 server, RS485 (dual RJ11), RS485 Modbus (dual RJ45), RS232, Modbus RTU, Modbus ASCII,
Protocols	ASCII protocol
Data Rates	300 to 19200 baud
Digital Addresses	247 (Modbus), 31 (ASCII).
Isolation	250V rms working, 2.3 kV rms per 1 min test
Environmental	
Operating Temperature	0°C to 55°C
Storage Temperature	-40°C to 85°C
Relative Humidity	95% at 40°C, non-condensing
Protection	NEMA-4X (IP-65) when panel mounted
Electrical Connections	

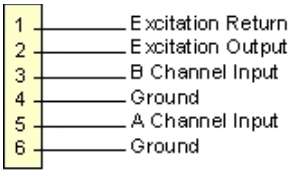

Mechanical

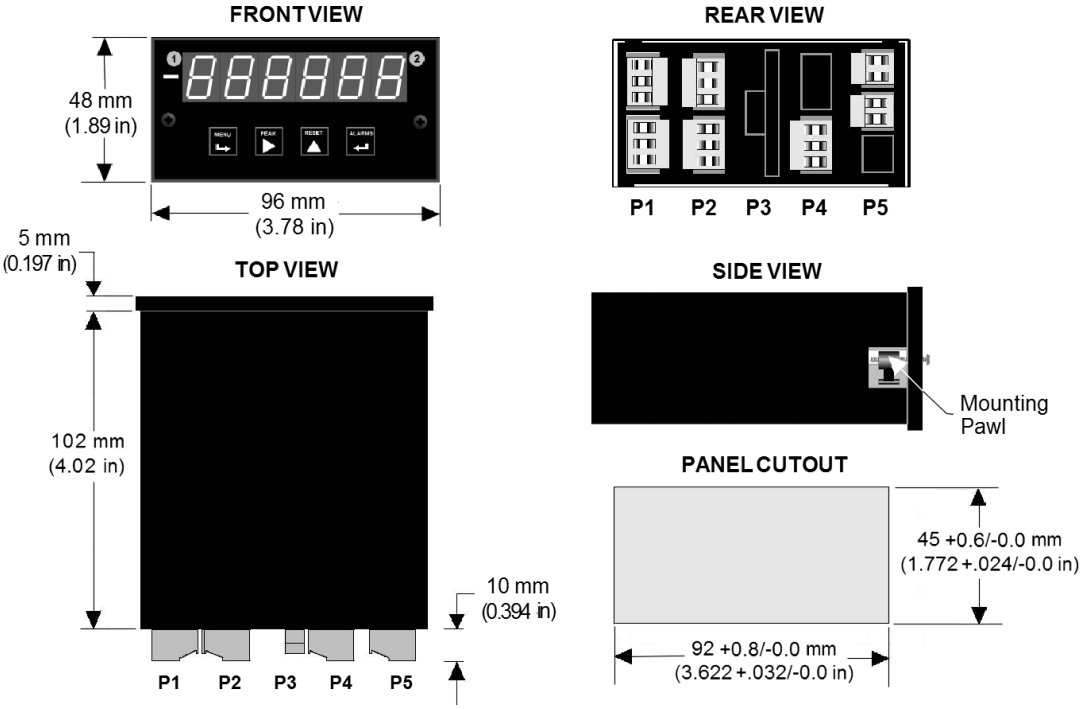

Application Examples

Up/Down Totalizing	
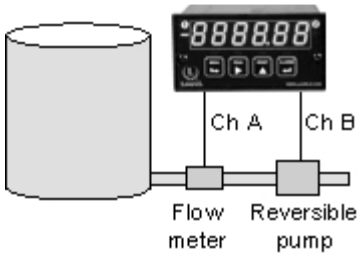	Up/down totalizing is provided by a mode of the Extended counter where pulses are either added or subtracted on Channel A based on a direction input on Channel B. The counter can also be programmed so that counting by Channel A is inhibited by an input on Channel B.

Combining Two Totals

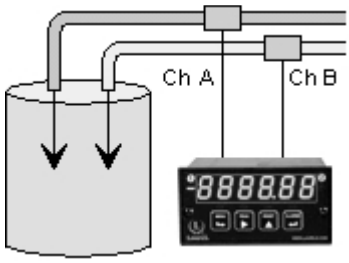

A+B, A-B and A/B arithmetic functions are available with the Extended counter. A+B sums both totals, while A-B subtracts the outflow total from inflow total. The A/B ratio applied to total helps assure the proper mixing of components.

Controller setup and monitoring of the mixing operation are facilitated by optional serial communications. RS-485 allows a single data line to handle multiple controllers.

Up or Down Counting with Preset

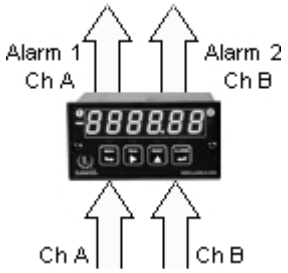

A single Laureate dual-channel counter will handle two repetitive fill operations by counting from zero up to a preset, or down from a preset to zero. A dual setpoint relay board is required.

Machine ON Time and Utilization

An easy way to measure the ON time of machines is to count AC line cycles and scale the total to hours. To display machine utilization or duty cycle in percent, use the Extended counter. Connect Channel A to switched AC and Channel B to the AC line, and have the counter display the A/B ratio with a 100 multiplier.

Total and Rate Simultaneously

The Extended version of the Laureate dual channel counter can display scaled rate or total for the same channel at the push of a button, and alarm both the rate and total. The Extended version can also do curve linearization, thereby extending the working range and accuracy of flow transducers.

System-level Capabilities

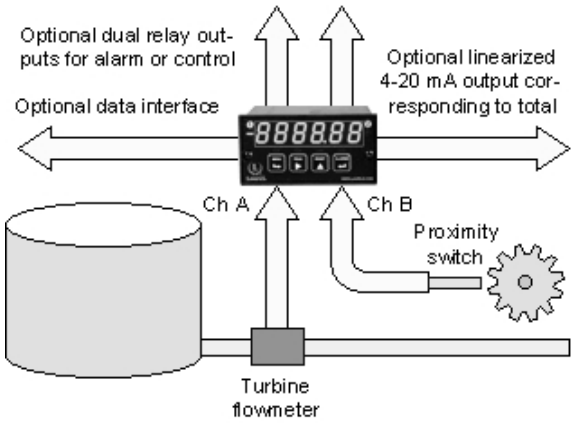

The Laureate dual channel totalizer can independently scale, display and alarm two totals, and the totals plus alarm data can be transmitted via RS-232 or RS-485. The displayed totals can also be transmitted as an isolated 4-20 mA or 0-10V analog output. The Extended version can further display and transmit arithmetic combinations of the two totals.

Ordering Guide

Create a model number in this format: **L50000FR, IPC**

Main Board	**L5** Standard Main Board, Green LEDs **L6** Standard Main Board, Red LEDs **L7** Extended Main Board, Green LEDs **L8** Extended Main Board, Red LEDs
	The Standard Main Board handles up or down totalizing as well as frequency, rate, period, square root of rate, stopwatch operation, and periodic time interval. **The Extended Main Board** handles the above plus simultaneous rate and total, stopwatch, arithmetic functions, phase, batching, and custom curve linearization.
Power	**0** Isolated 85-264 Vac **1** Isolated 12-32 Vac or 10-48 Vdc
Relay Output (isolated)	**0** None **1** Two 8A Contact Relays **2** Two 120 mA Solid State Relays **3** Four 8A Contact Relays **4** Four 120 mA Solid State Relays
Analog Output (isolated)	**0** None **1** Single isolated 4-20 mA, 0-20 mA, 0-10V, -10 to +10V **2** Dual isolated 4-20 mA, 0-20 mA, 0-10V
Digital Interface (isolated)	**0** None **1** RS232 **2** RS485 (dual RJ11 connectors) **4** RS485 Modbus (dual RJ45 connectors) **5** USB **6** USB-to-RS485 converter **7** Ethernet **8** Ethernet-to-RS485 converter
Input Type	**FR** Dual-Channel Pulse Input Signal Conditioner
Add-on Options	**CBL01** RJ11-to-DB9 cable. RJ11 to DB9. Connects RS232 ports of meter and PC. **CBL02** USB-to-DB9 adapter cable. Combination of CBL02 and CBL01 connects meter RS232 port to PC USB port. **CBL03-1** 6-wire data cable, RJ11 to RJ11, 1 ft. Used to daisy chain meters via RS485. **CBL03-7** 6-wire data cable, RJ11 to RJ11, 7 ft. Used to daisy chain meters via RS485. **CBL05** USB cable, A-B. Connects USB ports of meter and PC. **CBL06** USB to RS485 adapter cable, half duplex, RJ11 to USB. Connects meter RS485 port to PC USB port. **CASE1** Benchtop laboratory case for one 1/8 DIN meter **CASE2** Benchtop laboratory case for two 1/8 DIN meters **IPC** Splash-proof cover **BOX1** NEMA-4 Enclosure **BOX2** NEMA-4 enclosure plus IPC **BL** Blank Lens without button pads **NL** Meter lens without button pads