TURNSTILES.us™
SECURING THE U.S. and the GLOBE

Operating Instructions

Barrier
MHTM™ MicroDrive

Translation of the Original Operating Instructions

Contents

1 General 10
1.1 Information regarding the operating instructions 10
1.2 Pictogram explanation 11
1.3 Limitation of liability 12
1.4 Copyright protection 12
1.5 Scope of delivery 13
1.6 Warranty 13
1.7 Disclaimer 13
1.8 Customer service 13
1.9 EC-Declarations of conformity 14
1.10 Environmental protection 14
2 Safety 15
2.1 Intended use of the barriers 15
2.1.1 Intended use for certain road vehicles 15
2.1.2 Barrier, pedestrian traffic impossible 15
2.1.3 Barrier, pedestrian traffic not impossible 16
2.1.4 Non-intended use 16
2.2 Operator's responsibility 17
2.3 Changes and modifications 17
2.4 Specialists and operating personnel 18
2.4.1 Requirements 18
2.5 Personal protective equipment 19
2.6 Occupational safety and special dangers 19
2.6.1 Danger symbols on the MHTM™ MicroDrive barrier 19
2.6.2 Hazard notes and occupational safety 20
2.7 Danger area 27
3 Identification 28
3.1 Type plate 28
3.2 Type code 29
4 Technical data 30
4.1 Access 30
4.1.1 Dimensions and weight 30
4.1.2 Electrical connection 31
4.1.3 Operating conditions 31
4.1.4 Operating times 31

Contents

4.2 Access Pro H ... 32
4.2.1 Dimensions and weight ... 32
4.2.2 Electrical connection ... 33
4.2.3 Operating conditions ... 33
4.2.4 Operating times ... 33
4.3 Parking ... 34
4.3.1 Dimensions and weight ... 34
4.3.2 Electrical connection ... 35
4.3.3 Operating conditions ... 35
4.3.4 Operating times ... 35
4.4 Toll ... 36
4.4.1 Dimensions and weight ... 36
4.4.2 Electrical connection ... 37
4.4.3 Operating conditions ... 37
4.4.4 Operating times ... 37
4.5 Control unit ... 38
4.6 Plug-in module "Detector A–B" ... 39
4.7 Plug-in module "Radio" ... 39
5 Design and function ... 40
5.1 Design ... 40
5.1.1 Access and Parking ... 40
5.1.2 Access Pro H ... 41
5.1.3 Toll ... 42
5.2 Function ... 43
6 Transport and storage ... 44
6.1 Safety notes for transport ... 44
6.2 Transport inspection ... 45
6.3 Transport ... 46
6.4 Storage ... 46
7 Design notes for induction loops ... 47
8 Assembly and installation ... 51
8.1 Safety ... 51
8.2 Required steps ... 52
8.3 Foundation and empty conduits ... 53
8.3.1 Foundation and empty conduits for the barrier ... 54
8.3.2 Foundation and empty conduits for nesting post or light barrier post ... 57
8.4 Assembly and installation of induction loops ... 59
8.4.1 Directions for the assembly and installation of induction loops ... 59
8.4.2 Induction loops ... 61
8.4.3 Testing induction loops ... 61

Contents

8.4.4 Installing induction loops in bitumen, asphalt, or concrete 61
8.4.5 Installing induction loops under interlocking stone paving 63
8.5 Unpacking 64
8.6 Assemble housing 64
8.7 Assemble nesting post or light barrier post 66
8.8 Assemble safety light barrier 67
8.8.1 Assemble transmitter 67
8.8.2 Assemble receiver 68
8.9 Assemble barrier boom type "VarioBoom" 69
8.10 Assemble edge protection 69
8.11 Assembling flange and barrier boom 70
8.11.1 Barrier boom type "VarioBoom" and "MicroBoom" 70
8.11.2 Barrier boom type "MicroBoom-T" 73
8.12 Conversion "left version" – "right version" (VarioBoom and MicroBoom) 76
8.13 Check and set the balancing springs in the lever system 80
8.13.1 Setting balancing springs 81
8.13.2 Overview table balancing springs 82
8.14 Align barrier housing and post 84
8.15 Set nesting post height 85
8.16 Stick on prohibition signs 86
8.17 Check assembly and installation 86
9 Electrical connection 87
9.1 Safety 87
9.2 Installing electrical protective devices 88
9.3 Connecting the power cable 89
9.4 Connect customer's control lines (signalling devices) 91
9.4.1 Connecting safety devices 92
9.4.2 Plausibility check of the safety devices 92
9.4.3 Connecting safety loop 93
9.4.4 Connect and test the safety light barriers 94
9.4.5 Connecting emergency opening contacts 94
9.4.6 Digital inputs 95
9.4.7 Digital outputs and output relays 97
9.5 Checking the electrical connection 102
10 Parameterising control unit 103
10.1 Safety 103
10.2 Control elements control unit 103
10.3 Displays on the control unit 104

Contents

10.4 Symbols in the display 105
10.4.1 Control button functions..... 105
10.4.2 Current state of the barrier 106
10.4.3 Current programme mode 107
10.4.4 Current state of the induction loops..... 107
10.4.5 Further symbols 107
10.5 Parameterising options 108
10.6 Parameterising values..... 109
10.7 Select programme mode..... 110
10.7.1 Mode 1: Maintained contact 111
10.7.2 Mode 2: Deadman 112
10.7.3 Mode 3: Pulse control (bistable)..... 113
10.7.4 Mode 4: Two-pulse control 114
10.7.5 Automatic Modes 5 to 8: Drive direction 1 – overview and differences..... 115
10.7.6 Automatic Modes 5 to 8: Drive direction 2..... 119
10.7.7 Mode "Service" 120
10.8 Menu "Information" (i)..... 121
10.9 Programme mode 121
10.10 Menu "Setup" 122
10.10.1 Barrier speed 122
10.10.2 Delays..... 122
10.10.3 Cut off angle 124
10.10.4 Inputs 124
10.10.5 Outputs 124
10.10.6 Vend count..... 125
10.10.7 Impact settings..... 128
10.10.8 Start-up behaviour 129
10.10.9 Power failure..... 133
10.10.10 Closure by light barrier 134
10.10.11 Master/Slave..... 134
10.10.12 Menu "Language" 135
10.11 Menu "Attachments"..... 135
10.11.1 Signal light 135
10.11.2 Boom contact settings 138
10.11.3 Boom locking 139
10.12 Menu "Service"..... 140
10.13 Menu "Information"..... 140
10.14 Menu "Motor GW (Gateway)..... 140

Contents

10.15 Menu "Detector 1 (A-B)" 141
10.15.1 Check the working frequency of the induction loops 142
10.15.2 Reconciling and setting the operating frequency of the induction loop 143
10.16 Menu "Detector 2 (C-D)" 145
10.17 Menu "Radio control FM" 145
10.18 Factory settings.....148
11 Start-up and operation 149
11.1 Safety 149
11.2 Commissioning 150
11.3 Switching on and off the barrier 150
11.4 Putting the barrier temporarily out of operation 151
12 Maintenance 153
12.1 Safety 153
12.2 Cleaning 154
12.3 Maintenance schedule.....155
13 Malfunctions 157
13.1 Safety 157
13.2 Malfunction table – barrier malfunctions.....158
13.3 Warning and interference messages on the display.....161
13.3.1 Warning and interference messages – Logic control (control unit) 161
13.3.2 Warning and interference messages – Motor GW 163
13.3.3 Warning and interference messages – detector.....164
13.3.4 Warning and interference messages – All modules 165
13.4 Reset the barrier 165
13.5 Closing or opening the barrier boom in case of power failure 166
14 Repair 167
14.1 Safety 167
14.2 Spare parts 168
14.3 Replacing the barrier boom 168
14.3.1 Barrier boom type "VarioBoom" and "MicroBoom".....168
14.3.2 Barrier boom type "MicroBoom-T".....172

Contents

15 Decommissioning, disassembly and disposal..... 174

17 EC-Declarations of conformity..... 179

17 Appendix 179

17.1 Wiring diagram 179

17.2 Menu setup 187

Index 191

General

1 General

1.1 Information regarding the operating instructions

These operating instructions provide crucial information on handling of barriers MHTM™ MicroDrive. Pre-requisite for safe working is the observance of all specified safety notes and instructions.

In addition, the local accident prevention regulations valid at the barrier's area of application and general safety regulations have to be complied with.

Carefully read the operating instructions before starting any work! They are a product component and must be kept in direct proximity of the barrier, well accessible to the personnel at all times.

When passing the barrier on to third parties, the operating instructions must also be handed over.

Components from other suppliers may have their own safety regulations and instructions for use. These must also be observed.

Programme versions Control unit MGC and plug modules

This operating instruction is valid for the following programme versions. Software number (software #) and software version (SW version) are indicated in the respective menu "Information" or "Motor SW".

Designation	Software #	SW version
Master Controller Standard	4915,1000	0.7
Motor Gateway Controller	4915,3000	0.6
Detector module 2-channel	4915,3001	0.6
Radio module 433 MHz	4915,3003	0.4
Ethernet Module	4915,3004	0.1

Table 1: Programme versions

1.2 Pictogram explanation

Warning notes

Warning notes are characterised by pictograms in these operating instructions. The warning notes are prelude by signal words expressing the scale of the hazard.

It is absolutely essential to observe the notes and to proceed with caution in order to prevent accidents as well as bodily injuries and property damage.

⚠ DANGER!	
	DANGER! … points to an immediately dangerous situation, which leads to death or severe injuries if it is not avoided.

⚠ WARNING!	
	WARNING! …points to a possibly dangerous situation that may lead to death or severe injuries if it is not avoided.

⚠ CAUTION!	
	CAUTION! … points to a potentially dangerous situation, which can lead to minor injuries if it is not avoided.

NOTICE!	
	NOTICE! … points to a potentially harmful situation, which can lead to property damage if it is not avoided.

Hints and recommendations

NOTE!

…highlights useful hints and recommendations as well as information for an efficient and trouble-free operation.

1.3 Limitation of liability

All specifications and notes in these operating instructions were compiled with consideration to the valid standards and regulations, the state of the art as well as to our long-standing knowledge and experience.

The manufacturer is not liable for damages caused by:

- Non-observance of the operating instructions
- Improper use
- Deployment of non-trained personnel
- Arbitrary modifications
- Technical changes
- Use of non-approved spare and wear parts.

The actual scope of supply may differ from the explanations and illustrations described in this manual in case of special designs, if additional order options are made use of, or due to latest technical changes.

1.4 Copyright protection

Surrendering the operating instructions to third parties without written permission of the manufacturer is not permitted.

1.5 Scope of delivery

The scope of delivery comprises:

- 1 barrier housing
  incl. drive unit and control
- 1 Barrier
- 2 Attachment profiles
- 2 Prohibition sign stickers
- Edge protection
- Options if applicable

Supplied documentation per barrier:

- These operating instructions.

1.6 Warranty

Subject to the condition that the operating instructions are observed, and that no inadmissible operations are carried out on the technical equipment, and that the installation has suffered no mechanical damage, Grants a warranty on all mechanical and electrical components of the product to the extend as stated in its standard terms of sales and delivery or as contractually agreed in writing.

1.7 Disclaimer

Expressly disclaims all implied and statutory warran-ties, including but not limited to, the implied warranties of mer-chantability and fitness for a particular purpose with respect to the product and the statutory warranty of non-infringement of third party rights set forth in section 2312(3) of the uniform commercial code.

1.8 Customer service

Your vendor is available to you for technical information

For the address, see invoice, delivery note or the reverse of these instructions.

1.9 EC-Declarations of conformity

EC-Declarations of conformity (pursuant to EC Machinery Directive 2006/42/EC, Annex II) refer to page 175.

1.10 Environmental protection

NOTICE!	
	NOTICE! **Danger for the environment by improper disposal of components or the barrier!** In case of improper disposal of components or the barrier, damage to the environment may result. Therefore: – Observe the valid environmental directives. – After appropriate disassembly the parts have to be recycled. – Separate recyclable fraction and feed to recycling.

2 Safety

2.1 Intended use of the barriers

The MHTM™ MicroDrive barriers are exclusively in-tended for controlling access to and exit of certain road vehicles in or from certain areas.

The barrier is either controlled by a person in manual operating modes or by access control systems in automatic operating modes and monitored by induction loops and/or safety light barriers.

Electrical energy is used exclusively for operating the barrier. The barrier boom weight is balanced out by spring energy.

The barrier consists of a barrier housing with drive system and control, as well as the barrier boom.

2.1.1 Intended use for certain road vehicles

Certain road vehicles according to chapter 2.1 paragraph 1 need to have sufficiently large metal areas in the vehicle floor area to en-able detection by induction loops.

Other or complementary safety facilities must be provided for road vehicles that cannot be detected by induction looks due to the metal area in the vehicle floor area being too small.

Additional safety installations must be provided for motorcycles.
→ Also see page 47, arrangement of "passenger car and motor-cycle loops".

2.1.2 Barrier, pedestrian traffic impossible

In vehicle barriers where personal traffic is excluded, use for per-sonal traffic is non-intended use.

The presence of persons and animals must be excluded by the operator. This shall apply for the following barrier types:

- Access Pro
- Parking, Parking Pro, Parking Select
- Toll, Toll Pro.

2.1.3 Barrier, pedestrian traffic not impossible

In vehicle barriers where personal traffic cannot be excluded, use for personal traffic is intended use.

If persons and animals may be present, only the following barriers may be used in connection with safety PE-beams.

- Access
- Access-L
- Access Pro L, Access Select L
- Access Pro H, Access Select H.

2.1.4 Non-intended use

Control of pedestrian traffic as contrary to intended use.

The barriers must not be used at railway crossings.

The barriers are not approved for pedestrian traffic, bicycles or animals.

The barriers must not be used in explosive environments.

All uses not described as intended use are prohibited.

⚠ WARNING!

WARNING!
Non-intended use is dangerous!

Every non-intended use can lead to dangerous situations.

Therefore:

– Only use barrier as intended.
– All specifications in these operating instructions have to be strictly complied with.

Any types of claims due to damage arising from improper use are excluded. The operator alone shall be responsible for any damage arising from improper use.

2.2 Operator's responsibility

The operator must comply with the statutory obligations regarding work safety.

In addition to the work safety notes in these operating instructions, the safety, accident prevention and environmental provisions applicable for the area the barrier is used in must be complied with.

In particular, the operator must:

- gather information on applicable work protection provisions.
- determine additional danger in a danger analysis.
- implement the required code of conduct for operation of the barrier on site in operating instructions.
- regularly verify throughout the barrier's time of use that the operating instructions drawn up by him comply with the current state of the regulations.
- adapt the operating instructions to any new provisions, standards and usage conditions - where required.
- clearly determine the responsibilities for installation, operation, maintenance and cleaning of the barrier.
- ensure that all employees that are working at or with the barrier have read and understood the operating instructions.
- Furthermore, the operator must train personnel regarding the use of the barrier at regular intervals and provide information on possible danger.

Furthermore, the operator is responsible for:

- keeping the barrier in perfect technical order and condition at all times.
- maintaining the barrier according to the maintenance intervals and performing the safety inspections as stipulated.
- checking all protective facilities for completeness and proper function at regular intervals.

The operator is also responsible that the danger area of the barrier boom cannot be accessed by any unauthorised persons, and in particular not by children, under any circumstances.

2.3 Changes and modifications

Changes, modifications and re-builds of the barrier or installation can cause unforeseen danger.

A written authorisation of the manufacturer is required before executing any technical changes and extensions on the barrier.

2.4 Specialists and operating personnel

2.4.1 Requirements

⚠ WARNING!

WARNING!
Risk of injury in case of inadequate qualification!

Improper handling can lead to considerable bodily injuries and property damage.

Therefore:

– Have any activities only carried out by the individuals designated for that purpose.

The operating instructions specify the following qualification requirements for the different fields of activity:

- **Instructed people**
  have been instructed during instructions provided by the operator with regard to the work assigned to them and possible hazards arising from improper conduct.
- **Specialised staff**
  is due to its technical training, knowledge and experience as well as due to its knowledge of the pertinent regulations able to carry out the work assigned to it and to independently recognise potential hazards.
- **Electrical specialists**
  are able, due to their technical training, knowledge and experiences as well as knowledge of the relevant standards and regulations, to execute tasks on electrical systems and to independently recognise possible hazards.
  In Germany, the electrical specialist must comply with the provisions of accident prevention regulation BGV A3 (e.g. master electrical fitter). Appropriate regulations apply in other countries. The regulations valid there must be observed.
- **MHTM™ MicroDrive service experts**
  comply with the requirements of the electricians named here. Additionally, these electricians are trained and authorised by MHTMTM MicroDrive barriers.to perform special repair and service work at MHTM™ MicroDrive barriers.

It must be expected that only those people are deployed who carry out their work reliably. People, whose ability to respond is affected, e.g. by drugs, alcohol or medicines, may not be assigned. Furthermore, the age and profession-specific regulations valid at the operating location must be observed when selecting personnel.

2.5 Personal protective equipment

It is necessary to wear personal protective equipment when dealing with the barrier so as to minimise health hazards.

Before carrying out any work, properly dress in the necessary protective equipment such as work clothes, protective gloves, safety shoes, helmet and wear during work.

2.6 Occupational safety and special dangers

The remaining risks resulting from the risk analysis are specified in the following section.

Observe the safety notes listed here and the warning notes mentioned in the other chapters of these instructions to reduce health hazards and to avoid dangerous situations.

2.6.1 Danger symbols on the MHTM™ MicroDrive barrier

The relevant dangerous areas on the barriers can be identified by the following pictograms:

Electric voltage

⚠ DANGER!	
	**DANGER!** **Mortal danger by electric voltage!** ... indicates life threatening situations caused by electric voltage. Non-observance of the safety instructions causes severe injuries or death. Necessary work may only be carried out by an electrical specialist. This pictogram is fixed on the following component: – Assembly plate in the barrier housing.

Danger of crushing

⚠ WARNING!	
	**WARNING!** **Danger of crushing!** … indicates the presence of components and items moving towards each other. Non-observance of the safety instructions can cause severe injuries. This pictogram is fixed on the following component: – At the access points for the lever system on the front and rear of the top assembly plate. – At the access point for the flanged shaft on the front and rear of the top assembly plate.

Hot surfaces

⚠ CAUTION!	
	**CAUTION!** **Danger of burns!** … indicates the presence of a hot surface. Non-observance of the safety instructions can lead to minor injuries. This pictogram is fixed on the following component: – Motor in the barrier housing. – Heating (optional) in the barrier housing.

2.6.2 Hazard notes and occupational safety

For your own safety and for the protections of the barrier modules, the following information must be observed and complied with:

Electric voltage

⚠ DANGER!	
	**DANGER!** **Mortal danger by electric voltage!** Touching live parts can be lethal. Damage to the insulation or to individual components can be lethal. Therefore: – Switch off the power supply immediately in case of damage to the insulation and arrange repair. – Only electrical specialists may carry out work on the electrical system. – Switch off power supply and secure against re-activation before performing any work. Test for absence of voltage! – Never bypass or deactivate fuses. – When replacing fuses observe the correct amperage specification. – Keep moisture and dust away from live parts. Moisture or dust may cause a short circuit. If the electrical connection is established at precipitation, e.g. rain or snow, penetration of moisture must be prevented by suitable measures, such as a protective cover.

Electric voltage – missing safety installations

⚠ DANGER!

DANGER!
Mortal danger by electric voltage!

The safety installations that are required according to regional and local regulations must be provided by the customer. Usually these are:

- Residual current device (RCD)
- Circuit-breaker
- Lockable 2-pole main switch according to EN 60947-3.

Thunderstorm, lightning, electric voltage

⚠ DANGER!

DANGER!
Mortal danger from lightning and electrical voltage!

If lightning strikes the barrier, contact to the barrier components and direct proximity to the barrier includes mortal danger.

Therefore:

- Never install the barrier housing and barrier boom during thunderstorms.
- Protect yourself in buildings or vehicles.

Safety

Improper operation

⚠ WARNING!

WARNING!
Danger from improper operation of the barrier!

Improper operation of the barrier can cause severe or lethal injuries!

Therefore:

- The barrier closes automatically in certain programme modes. Passing of two vehicles within a single opening process must be prevented by the construction and appropriate signs or signals.
- The barrier is intended for a single drive direction at the same time. The operator must prevent concurrent oncoming traffic by suitable measures, such as signs.
- Only additions to the barrier casing or boom that are permitted by the manufacturer may be installed.
- Keep barrier area free from objects.
- Do not use the barrier boom as a lifting device.
- Never climb over or crawl under boom.
- Never sit on the barrier housing or climb over it.
- Do not sit or have yourself lifted by the boom.
- Never open or stop the boom manually.

Entering the danger area of the barrier – Pedestrian traffic possible

⚠ CAUTION!

WARNING!
Danger from entering the danger area!

The MHTM™ MicroDrive barriers are intended exclusively for closing off passages for motor vehicles and trucks. For vehicles that cannot be detected by induction loops, additional safety measures must be provided. Presence of persons and animals is possible. Entering the danger area can cause injuries!

Therefore, the operator must take the following measures:

- Observing country-specific laws and regulations.
- Marking the danger area by prohibition signs for persons, bicycles, etc.

Entering the danger area of the barrier – Pedestrian traffic impossible

⚠ WARNING!

WARNING!
Danger from entering the danger area!

The MHTM™ MicroDrive barriers are intended exclusively for closing off passages for motor vehicles and trucks. For vehicles that cannot be detected by induction loops, additional safety measures must be provided. Entering the danger area can cause severe or lethal injuries!

Therefore, the operator must take the following measures:

- Observing country-specific laws and regulations.
- Presence of persons and animals must be excluded.
- Marking the danger area by prohibition signs for persons, bicycles, etc.
- If required, set up barriers such as fences and railings.
- If required, set up separate passageway for persons and bicycles.

Closing boom

⚠ WARNING!

WARNING!
Danger from closing boom!

A closing boom may cause severe or lethal injury to persons, bicyclers, cabriolet drivers and motorcycle drivers!

Therefore:

- Install safety installations, such as a safety light barrier as surveillance device. The surveillance device must prevent the closing of the barrier in case a person or a vehicle is standing below the barrier.
- Only use barrier booms approved of by MHTMTM MicroDrive barriers.
- Assemble edge protection.
- If the edge protection was damaged it must be replaced immediately or the barrier must be taken out of operation.

Safety

Improper transport

WARNING!

WARNING!
Danger from improper transport of the barrier boom and housing!

The weight of the barrier boom or housing can severely injure a person!

Therefore:

- Have them transported by specialists only.
- Use lifting gear or forklift with a suitable pallet.
- Use suitable lifting gear (loops, etc.) for lifting the barrier boom and barrier housing. The lifting gear must be designed for the respective weights.
- Carrying and lifting the barrier boom and housing from the pallet should be done by at least two people.

Heavy weight

WARNING!

WARNING!
Risk of injury when lifting heavy objects alone!

The weight of heavy objects can severely injure a person!

Therefore:

- Lifting and carrying the barrier boom and housing from the pallet should be done by a minimum of two people.

Falling components

WARNING!

WARNING!
Risk of injury from falling components!

Calling components such as the barrier boom can cause severe injury!

Therefore:

- Only place the barrier boom horizontally.
- Only install the barrier boom when there is no or little wind.
- Secure the barrier housing against tilting before assembly.
- Install the barrier housing correctly.

Insufficient fixing

⚠ WARNING!

WARNING!
Risk of injury at insufficient fixing!

Insufficient fixing of individual components such as barrier housing, barrier boom and additions permitted by the manufacturer can cause severe injury!

Therefore:

- Only qualified and skilled personnel are allowed to assemble the barrier and the appropriate components.
- Check the foundation anchors fit tightly before starting the barrier.
- Check the firm fixing of all screws according to maintenance schedule.

Insufficient fixing

⚠ WARNING!

WARNING!
Risk of injury at insufficient fixing!

Insufficient fixing of individual components such as barrier housing, barrier boom and additions permitted by the manufacturer can cause severe injury!

Therefore:

- Only qualified and skilled personnel are allowed to assemble the barrier and the appropriate components.
- Check the foundation anchors fit tightly before starting the barrier.
- Check the firm fixing of all screws according to maintenance schedule.

Safety

Danger of crushing, lever system and flange shaft

⚠ WARNING!

WARNING!
Danger of crushing at opened barrier housing at the lever system and flange shaft!

The lever system and the flange shaft in the barrier housing can cause serious crushing injuries!

Therefore:

- Only skilled personnel are allowed work on the barrier housing and barrier boom.
- Only work at the barrier housing when the power supply is turned off.
- Assemble barrier housing without barrier boom.
- For assembly of the barrier boom, strictly observe the descriptions in chapter 8.
- Wear protective gloves if necessary.

Danger of crushing, barrier boom and flange

⚠ WARNING!

WARNING!
Danger of crushing between barrier boom and barrier housing!

Moving parts may cause serious crushing injuries!

Therefore:

- Only skilled personnel are allowed work on the barrier housing and barrier boom.
- Only work at the barrier housing when the power supply is turned off.

Illegible signage

⚠ CAUTION!

CAUTION!
Risk of injury by illegible symbols!

Labels and signs can become dirty or unrecognisable in the course of time.

Therefore:

- Always keep safety, warning and operating notes in a well readable condition.
- Immediately renew damaged or unrecognisable signs or labels.

2.7 Danger area

Danger of crushing and shearing, barrier boom

⚠ WARNING!

WARNING!
Danger of crushing and shearing if the safety distance between the barrier boom and other objects is too low!

A closing or opening barrier boom can cause severe injuries from crushing if the safety distance to other objects is too low!

Therefore:

– Keep a safety distance of at least 500 mm between the barrier boom and other objects, such as walls, masonry or houses.

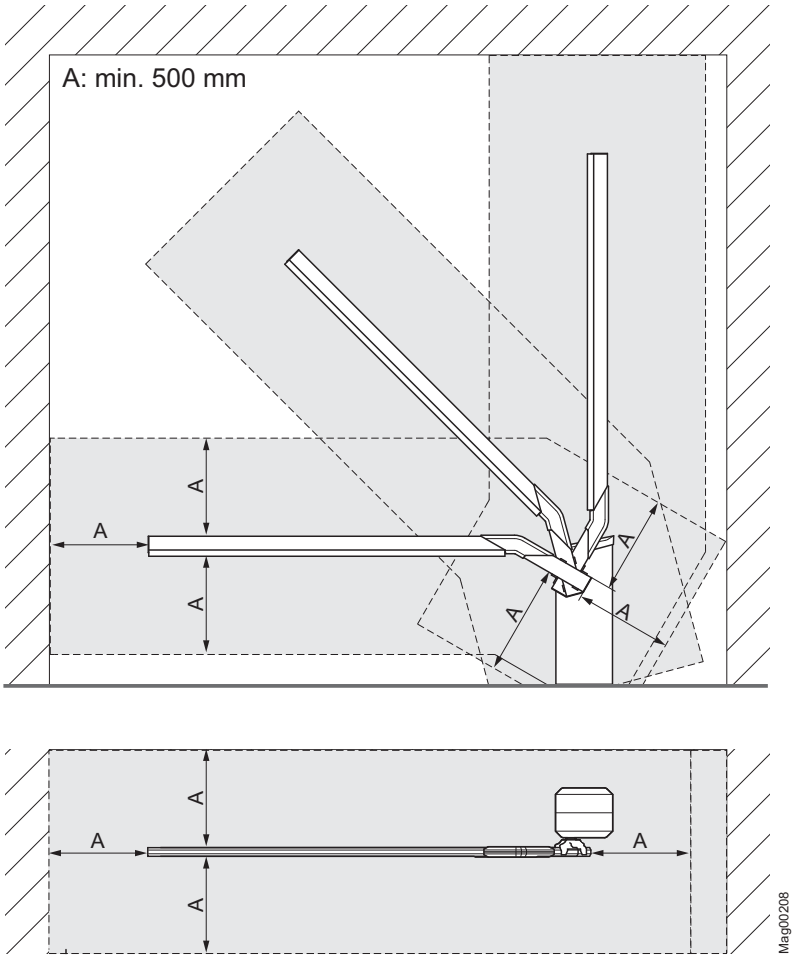

Fig. 1: Danger area

A Danger area of 500 mm

3 Identification

3.1 Type plate

The type plate is provided inside at the barrier housing, next to the hood attachment.

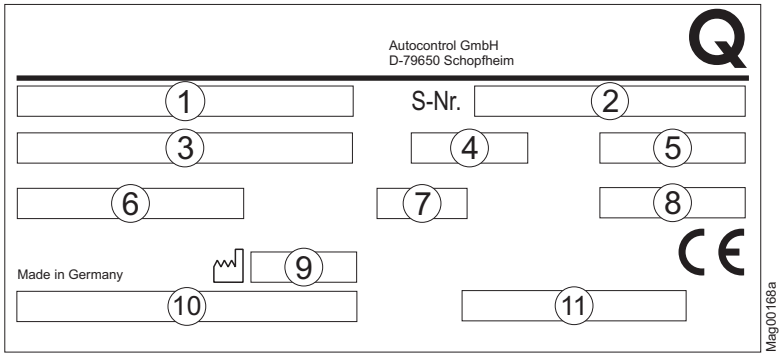

Fig. 2: Type plate

1 *Type code*
2 *Serial number*
3 *Power supply, Frequency*
4 *Current consumption*
5 *Power consumption*
6 *Operating time (Opening time/closing time)*
7 *Protection class*
8 *Duty cycle*
9 *Manufacturing year and month*
10 *Bar code for type code*
11 *Bar code for serial number*

3.2 Type code

													–	R	A	0	3	0	0	0
1	2	3	4	5	6	7	8	9	10	11	12	13	14	15	16	17	18	19	20	21

Position	Description
1 – 13	Product group: ACCESS — Magnetic.Acess ACCESS-L — Magnetic.Access long ACCESS PRO — Magnetic.Access Pro ACCESS PRO-L — Magnetic.Access Pro long ACCESS PRO-H — Magnetic.Access Pro high ACCESS SEL — Magnetic.Access Select ACCESS SEL-L — Magnetic.Access Select long PARKING — Magnetic.Parking PARING PRO — Magnetic.Parking Pro PARKING SEL — Magnetic.Parking Select TOLL — Magnetic.Toll TOLL PRO — Magnetic.Toll Pro
14	–
15	L = Left version R = Right version
16	A = Standard wide range 85 – 264 V AC / 47 – 63 Hz C = UL-version (US market)
17 – 19	Barrier boom length Standard length: 025 = 2.5 metre 030 = 3.0 metre 035 = 3.5 metre 045 = 4.5 metre 050 = 5.0 metre 060 = 6.0 metre
20	Colours 0 = Top cover: IGP-DuraFace 581MA20000A00 (RAL 2000) Housing: IGP-DuraFace 622SA22770A00 (RAL2000) Doors: IGP-DuraFace 5803E 71319A10 (anthracite) 1 = Top cover: IGP-DuraFace 581ME71384A10 (grey aluminium) Housing: IGP-DuraFace 622SE71384A10 (grey aluminium) Doors: IGP-DuraFace 5803E 71319A10 (anthracite) 2 = Top cover: IGP-DuraFace 581ME90060A10 (white aluminium) Housing: IGP-DuraFace 622SE90060A10 (white aluminium) Doors: IGP-DuraFace 5803E 71319A10 (anthracite) X = Special coats of paint
21	0

4 Technical data

4.1 Access

4.1.1 Dimensions and weight

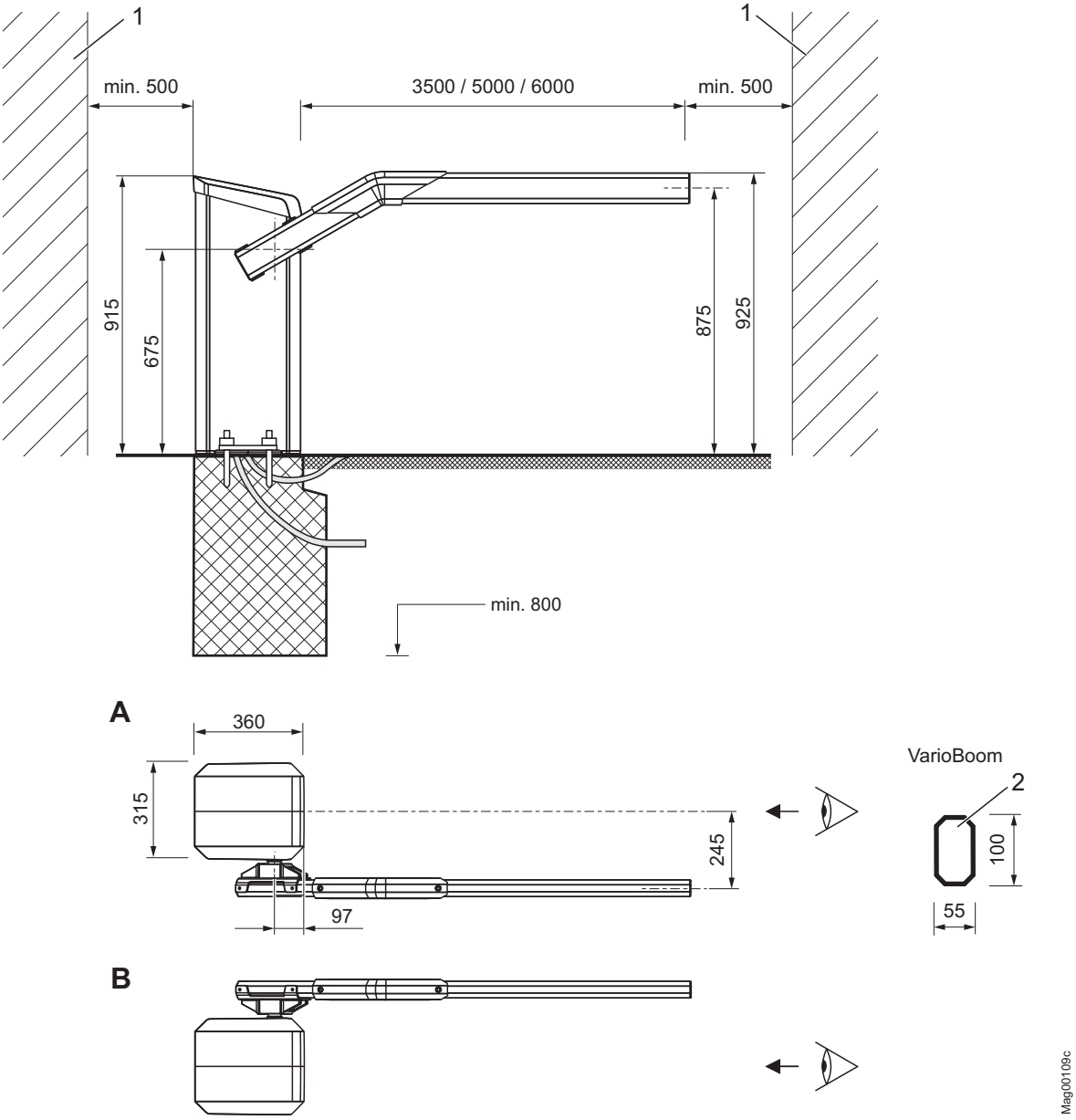

Fig. 3: Dimensions barrier system and barrier boom profile – "Access" series

1 Object such as wall, building, etc.
2 VarioBoom (barrier boom) with octagon boom profile

A Barrier, left version
B Barrier, right version

Designation	Unit	Access		Access Pro		Access Select	
			L		L		L
Locking width	mm	3500	5000	3500	6000	3500	6000
Barrier housing (width x depth x height)	mm	→ See page 30, Fig. 3. (315 x 360 x 915)					
Barrier housing weight	kg	40					

Table 2: Dimensions and weight – "Access" series

4.1.2 Electrical connection

Designation	Unit	Access		Access Pro		Access Select	
			L		L		L
Supply voltage	V AC	85 to 264					
Frequency	Hz	50 / 60					
Max. current consumption [1)]	A	0.25	0.25	0.8	0.25	0.8	0.25
Max. power consumption [1)]	W	25	30	95	25	95	25
Duty cycle	%	100					

1) The values refer to power supply of 230 V AC / 50 Hz and without accessories.

Table 3: Electrical connection – "Access" series

4.1.3 Operating conditions

Designation	Unit	Access		Access Pro		Access Select	
			L		L		L
Ambient temperature range	°C	–30 to +50					
Wind force	Bft (Beaufort)	max. 10					
Protection class barrier housing	–	IP 54					

Table 4: Operating conditions – "Access" series

4.1.4 Operating times

Designation	Unit	Access		Access Pro		Access Select	
			L		L		L
Opening time/ closing time	s	2.2	4.0	1.3	4.0	1.3	4.0

Table 5: Operating times – "Access" series

Technical data

4.2 Access Pro H

4.2.1 Dimensions and weight

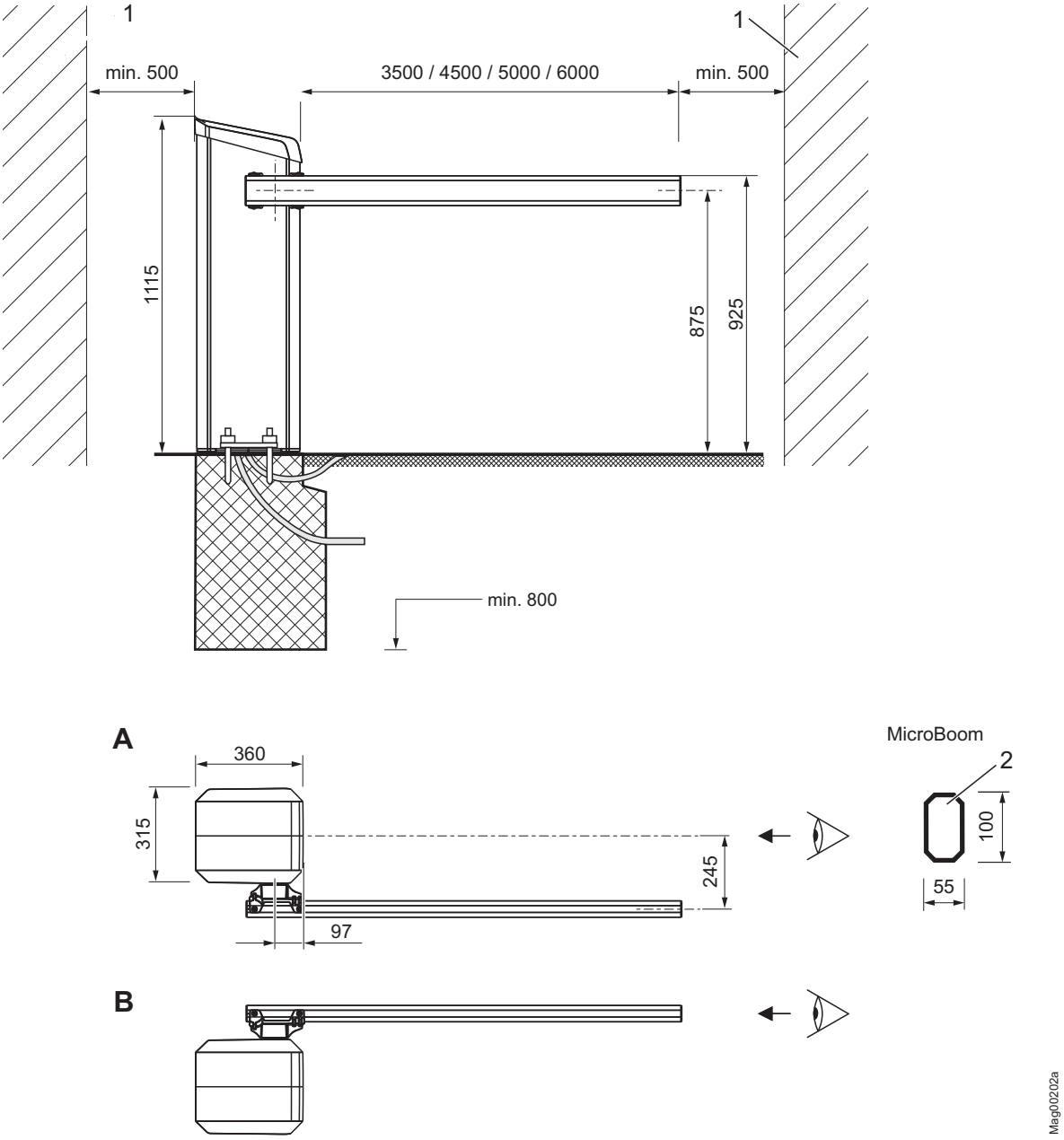

Fig. 4: Dimensions barrier system and barrier boom profile – "Access Pro H" series

1 Object such as wall, building, etc.
2 MicroBoom (barrier boom) with octagon boom profile

A Barrier, left version
B Barrier, right version

Designation	Unit	Access Pro H			
		3.5 m	4.5 m	5.0 m	6.0 m
Locking width	mm	3500	4500	5000	6000
Barrier housing (width x depth x height)	mm	→ See page 36, Fig. 4. (315 x 360 x 1115)			
Barrier housing weight	kg	44			

Table 6: Dimensions and weight – "Access Pro H" series

4.2.2 Electrical connection

Designation	Unit	Access Pro H			
		3.5 m	4.5 m	5.0 m	6.0 m
Supply voltage	V AC	85 to 264			
Frequency	Hz	50 / 60			
Max. current consumption [1)]	A	0.2	0.2	0.2	0.25
Max. power consumption[1)]	W	20	20	20	25
Duty cycle	%	100			

1) The values refer to power supply of 230 V AC and without accessories.

Table 7: Electrical connection – "Access Pro H" series

4.2.3 Operating conditions

Designation	Unit	Access Pro H			
		3.5 m	4.5 m	5.0 m	6.0 m
Ambient temperature range	°C	–30 to +50			
Wind force	Bft (Beaufort)	max. 10			
Protection class barrier housing	–	IP 54			

Table 8: Operating conditions – "Access Pro H"

4.2.4 Operating times

Designation	Unit	Access Pro H			
		3.5 m	4.5 m	5.0 m	6.0 m
Opening time/ closing time	s	4.0	4.0	4.0	4.0

Table 9: Operating times – "Access Pro H"

4.3 Parking

4.3.1 Dimensions and weight

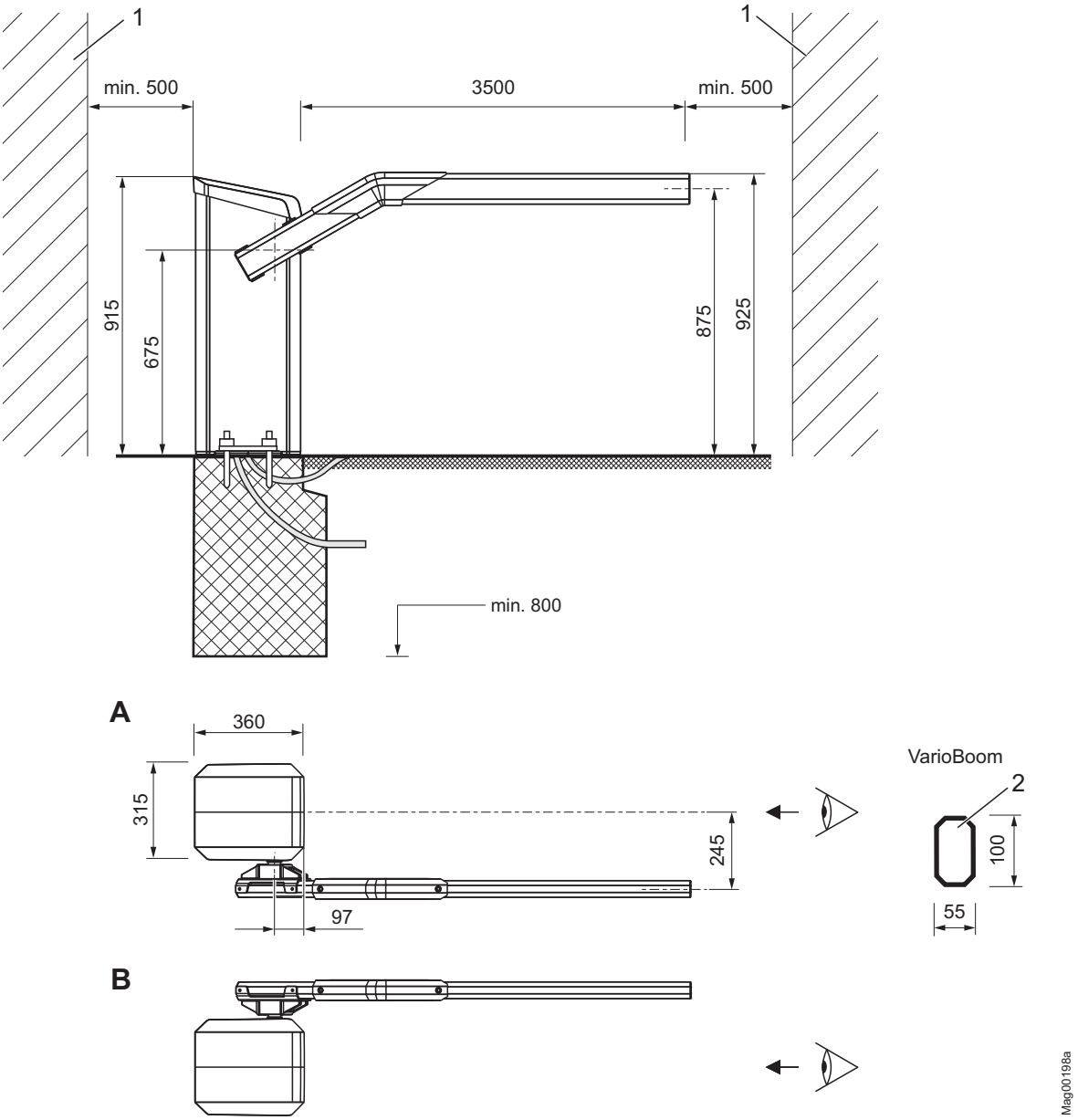

Fig. 5: Dimensions barrier system and barrier boom profile – "Parking" series

1 Object such as wall, building, etc.
2 VarioBoom (barrier boom) with octagon boom profile

A Barrier, left version
B Barrier, right version

Designation	Unit	Parking	Parking Pro	Parking Select
Locking width	mm	3500	3500	3500
Barrier housing (width x depth x height)	mm	→ See page 34, Fig. 5. (315 x 360 x 915)		
Barrier housing weight	kg	40		

Table 10: Dimensions and weight – "Parking" series

4.3.2 Electrical connection

Designation	Unit	Parking	Parking Pro	Parking Select
Supply voltage	V AC	85 to 264		
Frequency	Hz	50 / 60		
Max. current consumption 1)	A	0.35	0.8	0.8
Max. power consumption 1)	W	35	95	95
Duty cycle	%	100		

1) The values refer to power supply of 230 V AC and without accessories.

Table 11: Electrical connection – "Parking" series

4.3.3 Operating conditions

Designation	Unit	Parking	Parking Pro	Parking Select
Ambient temperature range	°C	–30 to +50		
Wind force	Bft (Beaufort)	max. 10		
Protection class barrier housing	–	IP 54		

Table 12: Operating conditions – "Parking" series

4.3.4 Operating times

Designation	Unit	Parking	Parking Pro	Parking Select
Opening time/ closing time	s	1.8	1.3	1.3

Table 13: Operating times – "Parking" series

Technical data

4.4 Toll

4.4.1 Dimensions and weight

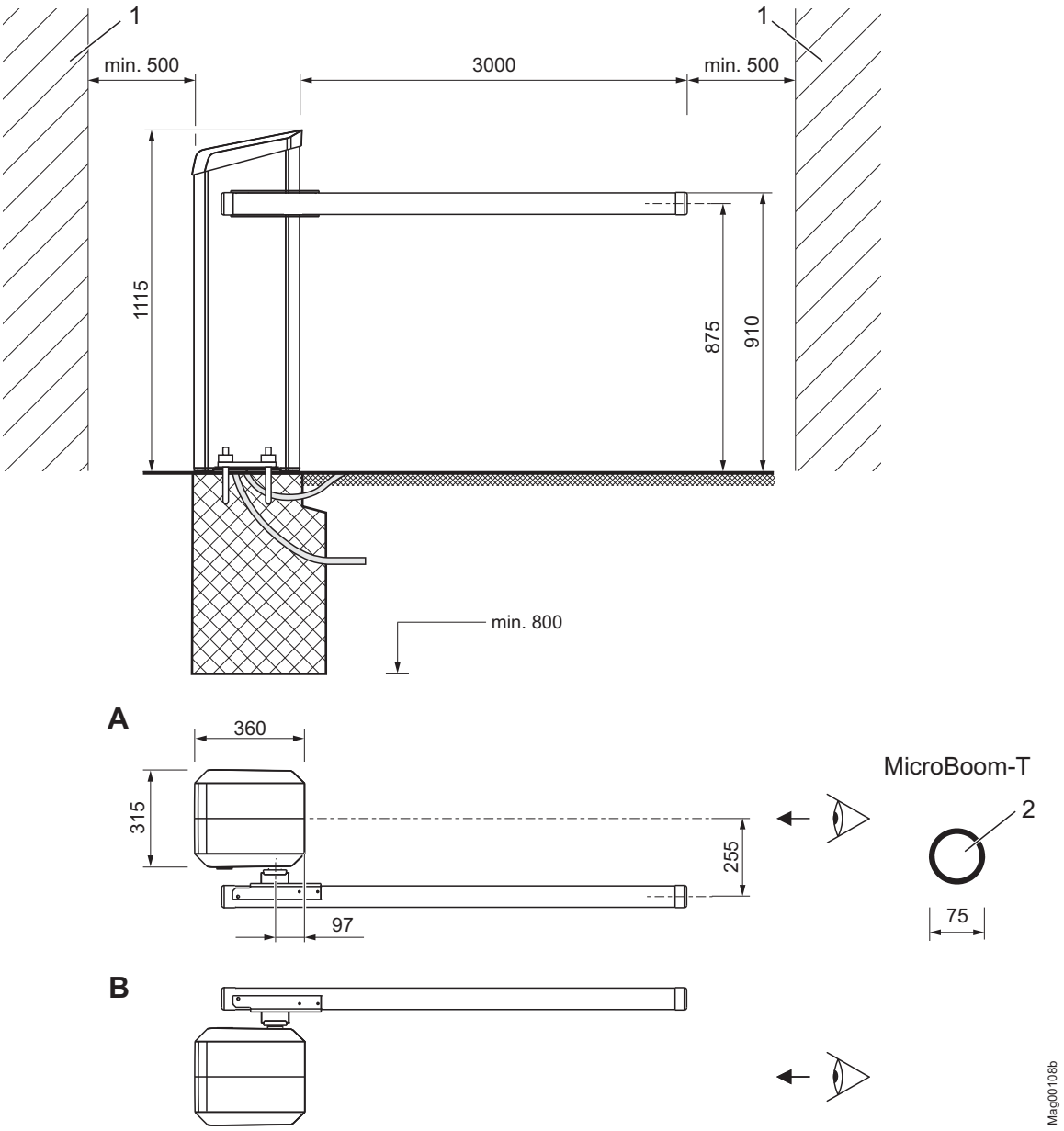

Fig. 6: Dimensions barrier system and barrier boom profile – "Toll" series

1 Object such as wall, building, etc.
2 MicroBoom-T (barrier boom) with round boom profile

A Barrier, left version
B Barrier, right version

Designation	Unit	Toll	Toll Pro
Locking width	mm	3000	
Barrier housing (width x depth x height)	mm	→ See page 36, Fig. 6. (315 x 360 x 1115)	
Barrier housing weight	kg	42	

Table 14: Dimensions and weight – "Toll" series

4.4.2 Electrical connection

Designation	Unit	Toll	Toll Pro
Supply voltage	V AC	85 to 264	
Frequency	Hz	50 / 60	
Max. current	A	0.5	0.8
Max. power consumption[1)]	W	55	95
Duty cycle	%	100	

1) The values refer to power supply of 230 V AC / 50 Hz and without accessories.

Table 15: Electrical connection and weight – "Toll" series

4.4.3 Operating conditions

Designation	Unit	Toll	Toll Pro
Ambient temperature range	°C	–30 to +50	
Wind force	Bft (Beaufort)	max. 10	
Protection class barrier housing	–	IP 54	

Table 16: Operating conditions – "Toll" series

4.4.4 Operating times

Designation	Unit	Toll	Toll Pro
Opening time/ closing time	s	1.3	0.9

Table 17: Operating times – "Toll" series

Technical data

4.5 Control unit

Designation		Unit	MGC Gate Controller)
Supply voltage		V DC	24
Current consumption		–	max. 1 A max. 300 mA + current consumption of the different plug-in modules
Power consumption		–	max 24 W. Max. 7.2 W + power consumption of the different plug-in modules
Control unit safety		–	1 A T
Output clamp X2	Output voltage	V DC	24
	Max. output current	mA	300
Digital inputs	Number	–	8
	Input voltage	V DC	24 ± 10 %
	Input current	–	< 10 mA per input
	Max. line length without overvoltage module [1)]	m	30
Digital outputs	Number	–	4 (open collector)
	Switching voltage	V DC	24 ± 10 %
	Max. switching current	mA	100
	Max. line length without overvoltage module [1)]	m	30
Output relay	Number	–	3 normally-open contact and 3 change-over contacts, isolated
	Max. switching voltage	V AC / DC	30
	Switching current	mA	10 mA to 1 A
	Max. line length without overvoltage module [1)]	m	30
Display		–	Graphics display, 128 x 65 Pixel
Language display		–	Selectable: German, English, French, Spanish, Italian or Portuguese
Number of slots for plug-in modules		–	5

1) For line lengths exceeding 30 m, overvoltage modules must be installed in front of the terminal clamps.

Table 18: Control unit

4.6 Plug-in module "Detector A–B"

Designation	Unit	Plug-in module "Detector A–B"
Current consumption	mA	50
Number of loop detectors	–	2 (A and B)
Inductance range	µH	70 to 500
Number of induction loop sensitivity levels	–	10 levels
Response sensitivity induction loop	%	Selectable: 0.01 to 2.0

Table 19: Plug-in module "Detector A–B"

4.7 Plug-in module "Radio"

Designation	Unit	Plug-in module "Radio"
Current consumption	mA	20
Frequency hand transmitter	MHz	433
HF modulation	–	FM/AM (depending on region)

Table 20: Plug-in module "Radio"

5 Design and function

5.1 Design

5.1.1 Access and Parking

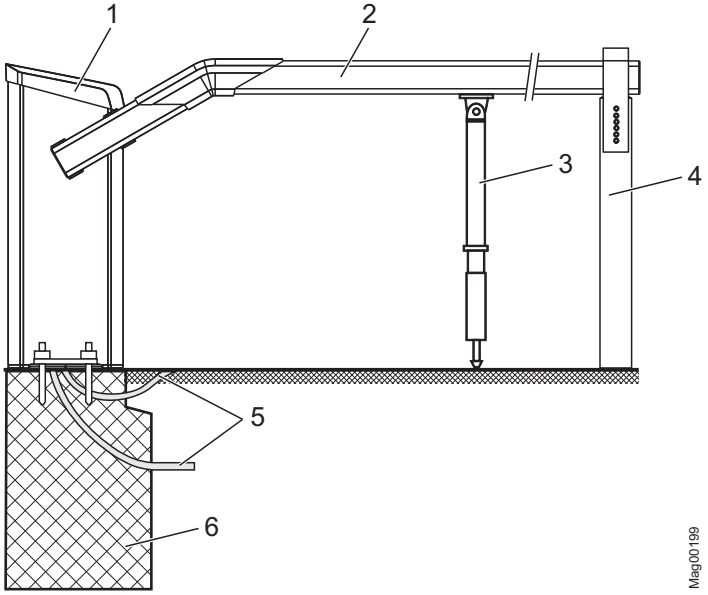

Fig. 7: Barrier system design Series "Access" and Series "Parking"

1 Barrier housing
2 VarioBoom (barrier boom)
3 Pendulum support from 3.5 m barrier boom length (accessory)
4 Nesting post (accessory)
5 Empty conduits for mains cable, control lines and induction loop
6 Concrete foundation with reinforcement

5.1.2 Access Pro H

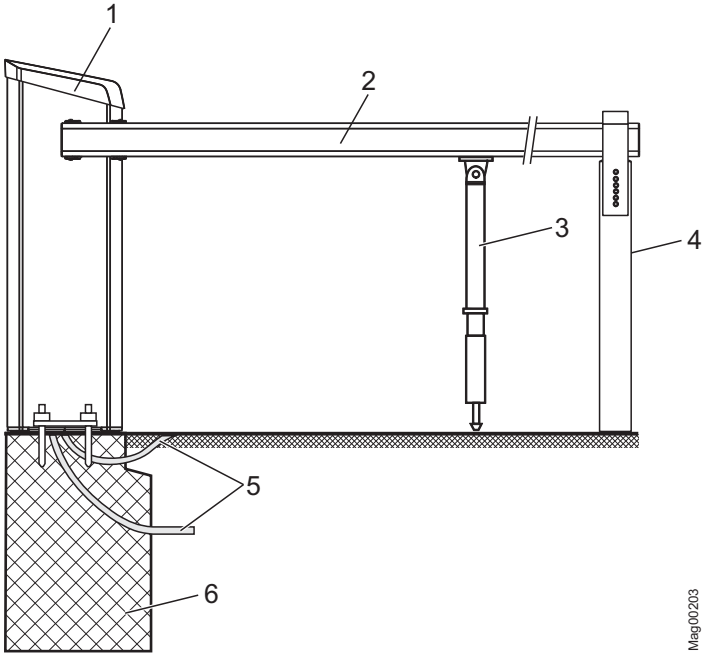

Fig. 8: Design barrier Series "Access Pro H"

1 Barrier housing
2 MicroBoom (barrier boom)
3 Pendulum support from 3.5 m barrier boom length (accessory)
4 Nesting post (accessory)
5 Empty conduits for mains cable, control lines and induction loop
6 Concrete foundation with reinforcement

Design and function

5.1.3 Toll

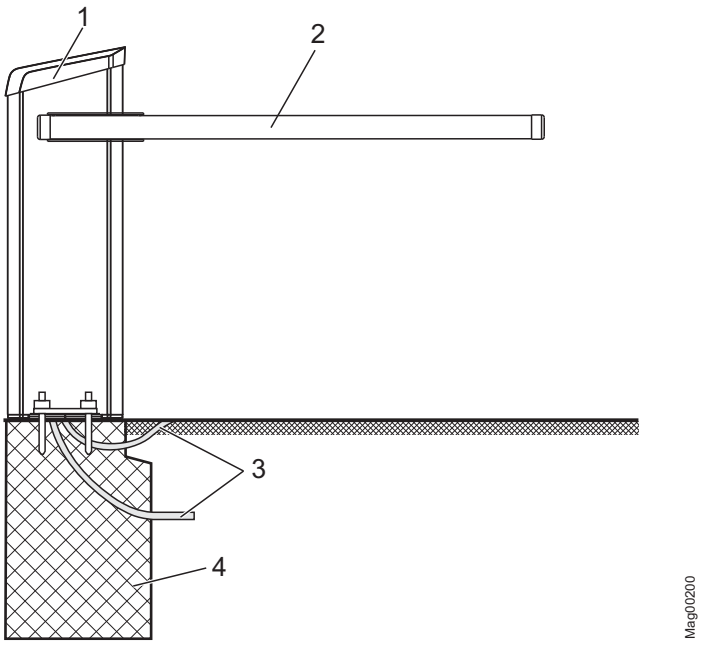

Fig. 9: Design barrier system Series "Toll"

1 Barrier housing
2 MicroBoom-T (barrier boom)
3 Empty conduits for mains cable, control lines and induction loop
4 Concrete foundation with reinforcement

5.2 Function

The barrier consists of a barrier housing with drive system and a barrier boom.

The drive system consists of an electric motor, control unit, and the lever system. The lever system locks the barrier boom in both end positions. In case of power outage, the barrier boom can easily be moved by hand. Integrated balancing springs in the lever system balance out the boom weight exactly. These balancing springs are pre-set in the factory.

Sensors integrated in the motor supply exact data on every correct position of the barrier boom and thus serve the control unit to control the best acceleration and deceleration.

For the series "Access" and "Parking", the angled barrier boom "VarioBoom" is used, this barrier boom enables driving through even at an opening of only 35°.

For the "Toll" series, the barrier boom is designed as a "Swing Away". That means, if a vehicle drives against the boom, it will snap from its flange. Depending on version, the barrier boom will automatically or by hand be returned to its original position.

Safety facilities like induction loops or safety light barriers must be installed on site in all cases. T

6 Transport and storage

6.1 Safety notes for transport

Improper transport

WARNING!

WARNING!
Danger from improper transport of the barrier boom and housing!

The weight of the barrier boom or housing can severely injure a person!

Therefore:

- Have them transported by specialists only.
- Use lifting gear or forklift with a suitable pallet.
- Use suitable lifting gear (loops, etc.) for lifting the barrier boom and barrier housing. The lifting gear must be designed for the respective weights.
- Lifting and carrying the barrier boom and housing from the pallet should be done by a minimum of two people.

Heavy weight

WARNING!

WARNING!
Risk of injury when lifting heavy objects alone!

The weight of heavy objects can severely injure a person!

Therefore:

- Lifting and carrying the barrier boom and housing from the pallet should be done by a minimum of two people.

Improper transport

NOTICE!

NOTICE!

The barrier system can be damaged by improper transport!

Substantial material damages can result from improper transport.

Therefore:

- Have all transport work performed by trained personnel.
- When unloading the packages and during in-plant transportation always proceed with greatest care and caution.
- Observe the symbols on the packaging.
- Observe the dimensions of the barrier system.
- Loading, unloading as well as moving the barrier system must take place with greatest care.
- Only remove packaging directly before assembly.

Personal protective equipment

The following must be worn during all transport work:

- Work clothes
- Protective gloves
- Safety shoes
- Protective helmet.

6.2 Transport inspection

Immediately check the delivery after receipt for completeness and transport damages.

Proceed as follows in the case of outwardly recognisable transport damage:

- Do not accept the delivery or only under reserve.
- Note the extent of damage on the transport documents or on the delivery note of the forwarder.
- Lodge complaint.

NOTE!

Lodge a complaint for each defect, as soon as it is recognised. Compensation claims can only be submitted within the valid complaint periods.

Transport and storage

6.3 Transport

Barrier housing and barrier boom are delivered separately.

The lifting gear must be designed for the weight of the barrier housing and barrier boom.

For transport barrier modules refer to the safety notes on page 44, chapter 6.1.

For future transports:

- Secure loose cables.
- Secure against vibrations.
- Securely fasten the barrier housing and barrier boom prior to transport (e.g. screw it onto a pallet).
- Transport and put down barrier housing and barrier boom with a forklift and lift with suitable lifting gear.

6.4 Storage

Store the barrier or packages under the following conditions:

- Do not store outdoors.
- Store dry and dust free.
- Do not expose to aggressive media.
- Protect against solar irradiation.
- Avoid mechanical vibrations.
- Storage temperature:–30 to +70 °C
- Relative humidity: max. 95 %, non-condensing
- Check the general condition of all components and packaging regularly, if they are stored for longer periods than 3 months.

7 Design notes for induction loops

→ For assembly and inspection, see page 59, chapter 8.4.

Please observe following points when dimensioning the induction loops:

- Induction loops respond only to metal. The mass is thereby not important, but the size of the loop's surface, which will be covered by the metal part.
- The induction loops must not respond to persons or objects with a small metal portion like a bicycle for instance.
- Motorcycles can be detected with appropriately installed induction loops. However, the induction loops are not a sufficient safety installation for motorcycles. Additional safety equipment, such as light barriers, light curtains etc. must be installed.
- Safety loops must secure the danger area underneath the barrier boom throughout the entire length.
- Opening loops must be installed right in front of the safety loop. The maximum distance between safety loop and opening loop must be not greater than max. 1.0 m.

Arrangement passenger car loops – standard

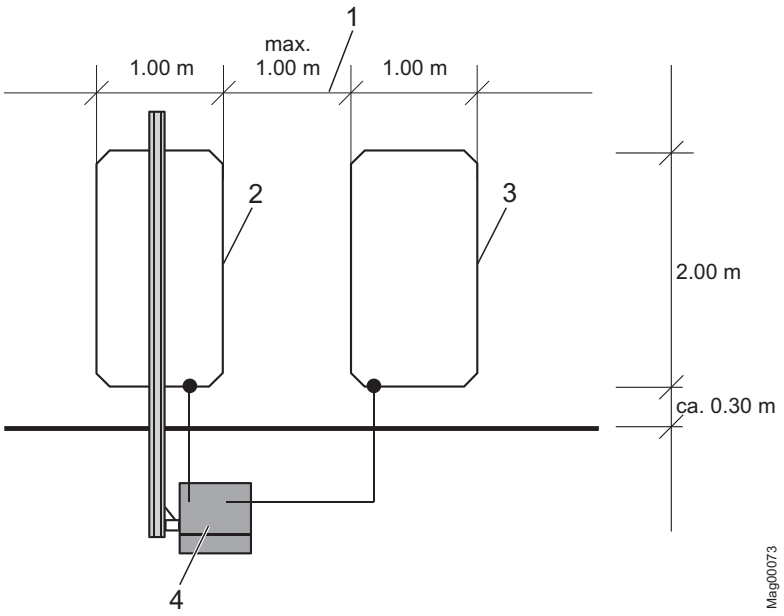

Fig. 10: Passenger car loop

1 *Maximum distance between opening loop and safety loop*
2 *Safety loop*
3 *Opening loop*
4 *Barrier*

Design notes for induction loops

Arrangement passenger car loops – passage with long opening loop

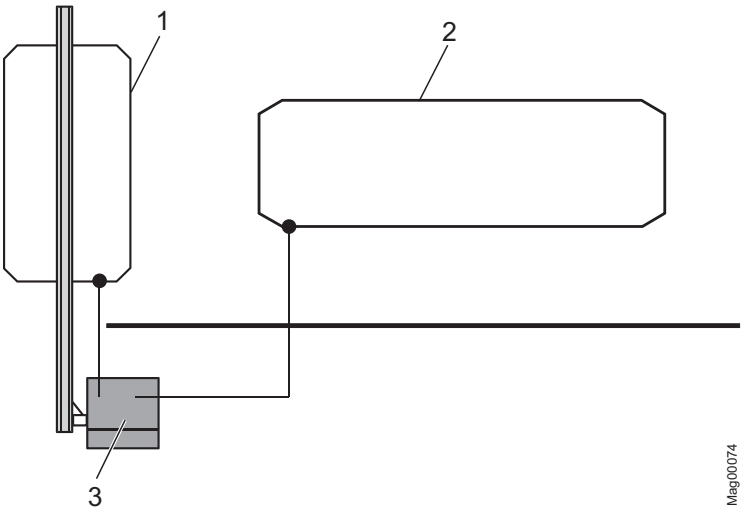

Fig. 11: Passenger car loops – passage with long opening time

1 Safety loop
2 Opening loop
3 Barrier

Due to a long opening loop vehicles can drive through without needing to stop.

Arrangement of lorry loops

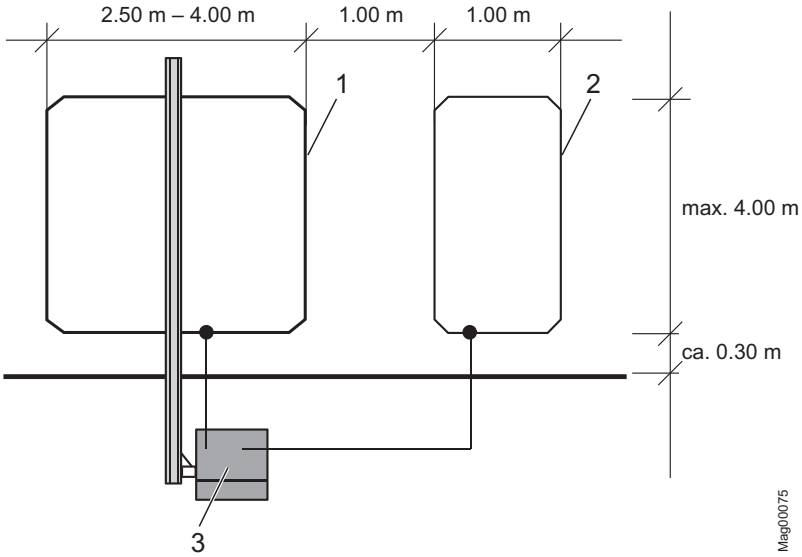

Fig. 12: Lorry loops

1 Safety loop
2 Opening loop
3 Barrier

For lorry passages the safety loop in the direction of travel must be at least 2.5 m long.

Design notes for induction loops

Arrangement of lorry/ passenger car loops

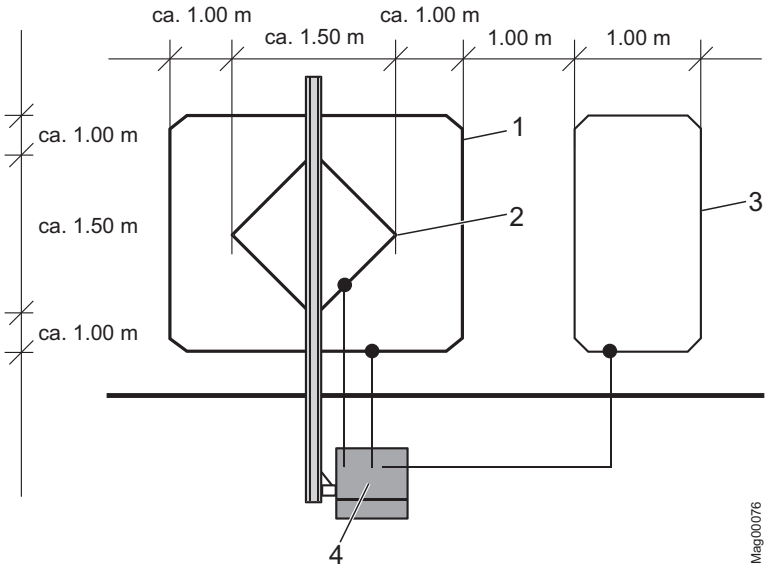

Fig. 13: Lorry/passenger car loops

1 Safety loop lorry (inductance "L1")
2 Safety loop passenger car (inductance "L2")
3 Opening loop lorry and passenger car
4 Barrier

Observe overall inductance "L_{total}". For calculation, see below.

For combined lorry/passenger car loops following points must be additionally observed:

- The winding direction of the inner safety loop for passenger cars must be identical to the outer safety loop for lorries. Meaning, the sensitivity in the middle between outer and inner loop is then at its maximum.
- Outer and inner loop can be both connected with one detector channel, as the case may be.
- The overall inductance determines, whether the lorry and the passenger car loop have to be implemented as series or as parallel circuit. Always lead both feed lines into the barrier housing. The overall inductance must be between 70 and 500 µH.

Calculation of the overall inductance for series circuits

$$Ltotal = L1 + L2$$

Calculation of the overall inductance for parallel circuits

$$Ltotal = \frac{L1 \bullet L2}{L1 + L2}$$

Design notes for induction loops

Arrangement of passenger car and motorcycle loops

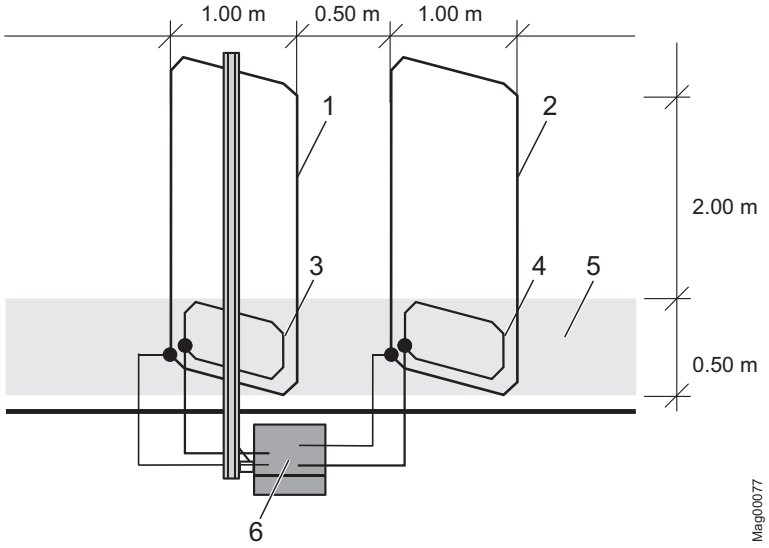

Fig. 14: Passenger car and motorcycle loops

1 Safety loop passenger car
2 Opening loop passenger car
3 Safety loop motorcycle
4 Opening loop motorcycle
5 Marked motorcycle track
6 Barrier

For passenger car loops combined with motorcycle loops following points must be additionally observed:

- Motorcycles can be detected with appropriately installed induction loops. However, the induction loops are not a sufficient safety installation for motorcycles. Additional safety equipment, such as light barriers, light curtains etc. must be installed.
- Use trapezium or slanted rectangular loops for passenger car loops combined with motorcycle loops. The angle to the direction of travel should preferably be 45°.
- Mark the motorcycle track clearly.
- The motorcycle track must consist of at least 6 windings.
- The winding direction of the passenger car loop and the motorcycle loop must be identical.

8 Assembly and installation

8.1 Safety

→ See also safety notes on page 19, chapter 2.6 "Occupational safety and special dangers".

General

⚠ WARNING!

WARNING!
Danger by inappropriate installation!

Inappropriate installation can cause severe injuries!

Therefore:

- Only specialist personnel or electrical specialists must perform any assembly and installation tasks.
- Prior to work, ensure that there is sufficient assembly space.
- Pay attention to tidiness and cleanness at the assembly site! Loosely stacked or lying around components and tools are accident sources.
- Comply with specifications for foundations and reinforcement.
- Ensure correct arrangement and fit on all assemblies and components.
- Install the indicated fastening elements correctly.

Danger of crushing and shearing, barrier boom

⚠ WARNING!

WARNING!
Danger of crushing and shearing if the safety distance between the barrier boom and other objects is too low!

A closing or opening barrier boom can cause severe injuries from crushing if the safety distance to other objects is too low!

Therefore:

- Keep a safety distance of at least 500 mm between the barrier boom and other objects, such as walls, masonry or houses. → See page 27, chapter 2.7.
- Assemble and install barrier system according to Fig. 15.

Personal protective equipment

The following must be worn during all assembly and installation work:

- Work clothes
- Protective gloves
- Safety shoes
- Protective helmet.

8.2 Required steps

The following steps are to be completed prior to assembly and installation:

- Laying the foundation with reinforcement for the barrier and install empty conduits.
- Set up foundation for nesting post or light barrier post and empty conduits.
- Installing induction loops.

The following procedures have to be observed during assembly and installation:

- Unpack barrier and accessories.
- Mount barrier housing on the foundation.
- Mount nesting post or light barrier post on the foundation.
- Mount safety light barrier.
- Assemble barrier boom (VarioBoom only).
- Mount edge protection.
- Mount barrier boom.
- Adjust balancing springs.
- Align barrier housing and nesting post or light barrier post.
- Set nesting post height.
- Assemble and install signalling device.
- Arrange electrical connections.
  → See page 89, chapter 9.3.

8.3 Foundation and empty conduits

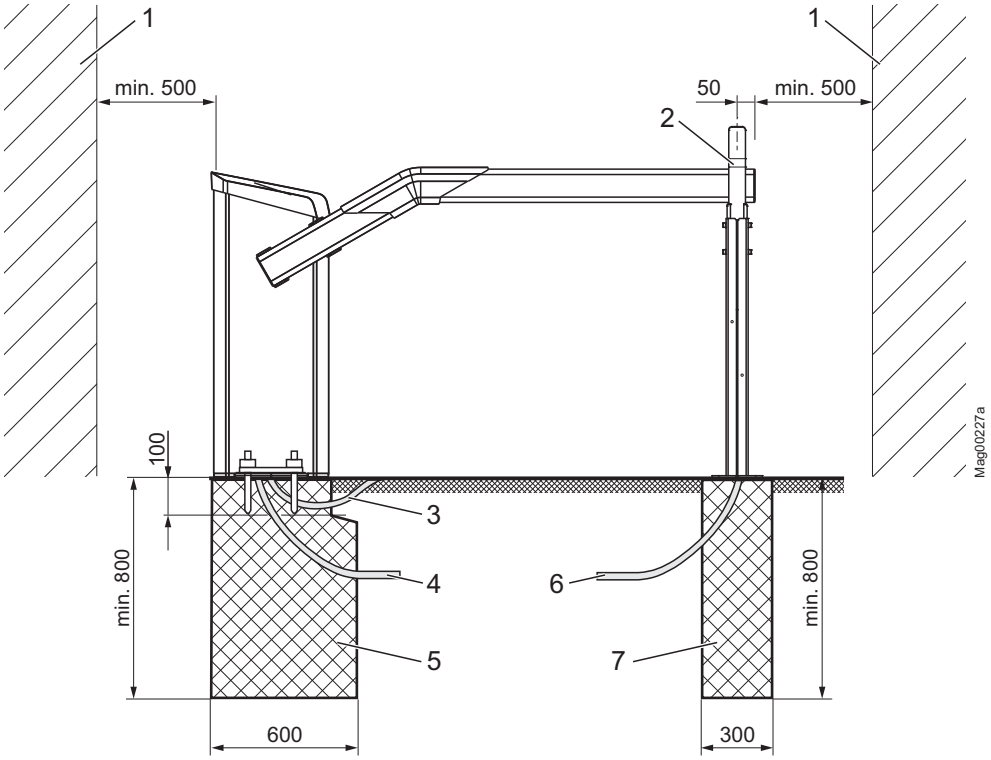

Fig. 15: Assembly boom system

1 *Object like wall, building, etc.*
Keep a safety distance of at least 500 mm between the barrier boom and other objects, such as walls, masonry or houses
2 *Posts, e.g. nesting posts, place post centre at a distance of 50 mm to the barrier boom tip*
3 *Empty conduit for induction loop connection*
4 *One empty conduit each for mains cable and control lines*
5 *Foundation with reinforcement grid for barrier housing*
6 *Optional: Empty conduit for safety light barriers, connection line receiver*
7 *Optional: Foundation for nesting post or light barrier post, nesting post displayed here*

8.3.1 Foundation and empty conduits for the barrier

Assembly site

The assembly site must meet the following requirements:

- The barrier must not be put up where there is a danger of flooding.
- Keep a safety distance of at least 500 mm between the tip of the barrier boom and other objects, such as walls, masonry or houses. → See page 53, Fig. 15.

Foundation and reinforcement

The foundation must meet the following requirements:
→ See page 53, Fig. 15 and page 55, Fig. 17.

- have sufficient load-carrying capacity.
  (concrete foundations: C35/45 XD3 XF2)
- Water cement value: 0.5
- Foundation depth: at least 800 mm, frost-protected foundation depth to be adjusted to the local situation.
- Foundation section: 450 mm x 600 mm
- Reinforcing grid as shown in figure Fig. 17

Empty conduits

The empty conduits must meet the following requirements:
→ See page 55, Fig. 16.

- Separate empty conduits for mains cable and control line
  Diameter: 29 mm each
- Optional empty conduit for induction loop.
  Diameter: 29 mm each
- Conduits have to be planned to a sufficient length.

NOTE!

To provide a trouble-free operation use separate conduits for control lines and mains cables.

Laying the foundation, installing empty conduits

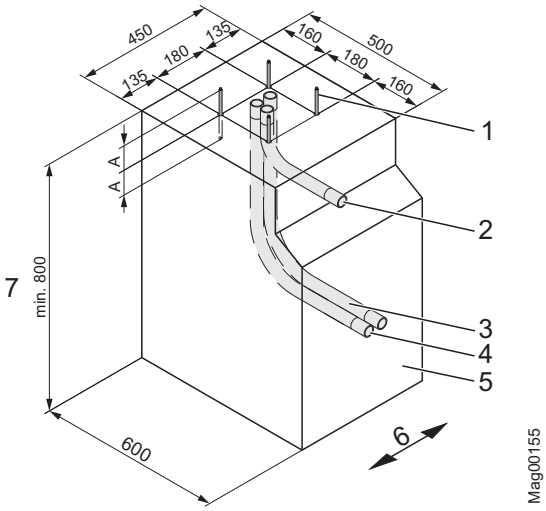

Fig. 16: Foundation plan

1 *Foundation anchor (4 pcs.)*
2 *Optional when using loop connection; empty conduit for loop connection, diameter: 29 mm*
3 *Empty conduit for induction loop, diameter: 29 mm*
4 *Empty conduit for control lines, diameter: 29 mm*
5 *Concrete foundations (C35/45 XD3 XF2)*
6 *Carriageway*
7 *Foundation depth: at least 800 mm, frost-protected foundation depth to be adjusted to the local situation.*

1. Dig foundation hole pursuant to Fig. 15 and Fig. 16.

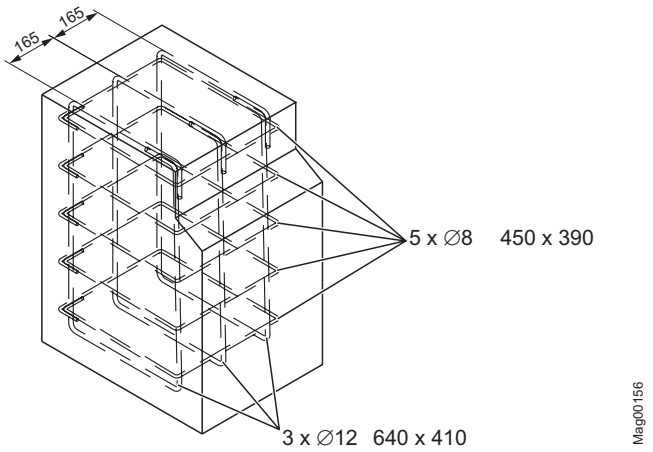

Fig. 17: Reinforcement grid

2. Place reinforcement grid pursuant to Fig. 17 in the foundation hole.
3. Place empty conduits pursuant to Fig. 16 in the foundation hole.
4. Close empty conduits to prevent water from entering.
5. Fill concrete foundation pursuant to Fig. 16.

Assembly and installation

6. Create flat line in the base area. The following requirements must be fulfilled:
   - Level and horizontal.
   - Surface deviation: max. 1 mm/m²
7. Let concrete cure.
8. Apply moisture protection agent to concrete surface.

NOTE!

We recommend applying moisture protection either in the form of sealing sludges such as 1100 Hansit or ready-made solution such as Sikagard® 703 W or deepdry® to the concrete surface before housing assembly. Moisture protection prevents entering of moisture into the housing from the concrete floor.

8.3.2 Foundation and empty conduits for nesting post or light barrier post

Danger of crushing

⚠ CAUTION!

CAUTION!
Crushing danger between the fork at the nesting post and the barrier boom!

Fingers and hands can be crushed when the barrier boom runs into the nesting post when closing.

Therefore:

- Switch off power supply during assembly.
- Do not hold on to fork from the inside. Wear safety gloves if required.

Dimensions

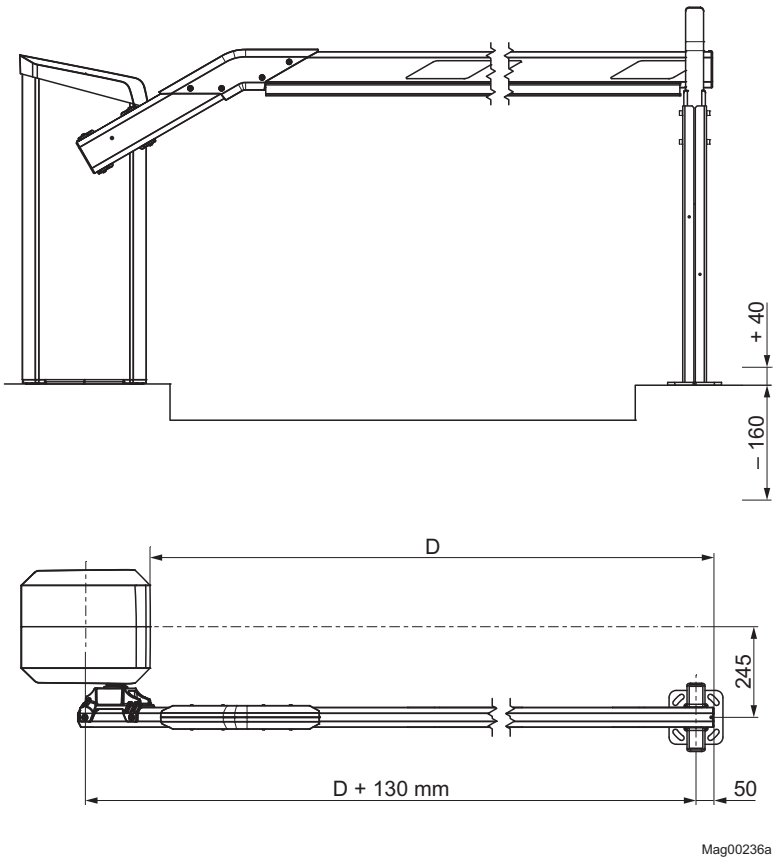

Fig. 18: Dimensions barrier casing – post

Assembly site

- The nesting post and light barrier post must not be put up where there is a danger of flooding.
- Place post centre at a distance of 50 mm from the barrier boom tip. → See page 57, Fig. 18.

Assembly and installation

Foundation

The foundation must meet the following requirements:
→ See page 53, Fig. 15 and page 58, Fig. 18.

- Have sufficient load-carrying capacity.
  (concrete foundations: C35/45 XD3 XF2)
- Water cement value: 0.5
- Foundation depth: at least 800 mm, frost-protected foundation depth to be adjusted to the local situation.
- Foundation section: 300 mm x 300 mm

Empty conduit

If the barrier system is equipped with a light barrier, an empty conduit must be installed for the transmitter connection line. Conduits have to be planned to a sufficient length.

Laying the foundation, Installing empty conduits

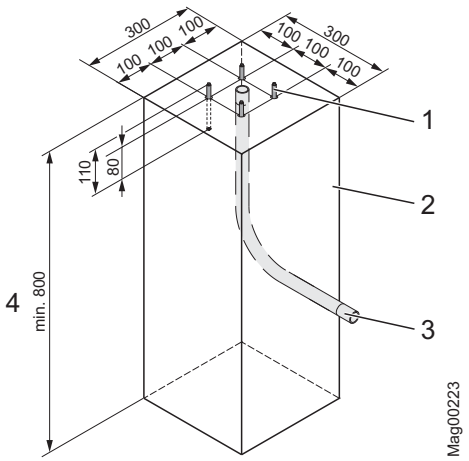

Fig. 19: Foundation plan for nesting post and light barrier post

1 Foundation anchor (4 pcs.)
2 Concrete foundations (C35/45 XD3 XF2)
3 Optional for light barriers:
Empty conduit for transmitter connection line
4 Foundation depth: at least 800 mm, frost-protected foundation depth to be adjusted to the local situation.

1. Dig foundation hole pursuant to and Fig. 19.
2. Place empty conduit pursuant to Fig. 19 in the foundation hole.
3. Close empty conduit to prevent water from entering.
4. Fill concrete foundation pursuant to Fig. 19.
5. Create flat line in the base area. The following requirements must be fulfilled:
   - Level and horizontal.
   - Surface deviation: max. 1 mm/m²
6. Let concrete cure.

8.4 Assembly and installation of induction loops

Depending on the application safety installations must be installed on site. Induction loops, light barriers, etc. can be used as safety installations.

The safety installations must ensure that the barrier closes only af-ter the vehicle has passed through.

8.4.1 Directions for the assembly and installation of induction loops

On barriers with an automatic closing function induction loops are used for the detection of vehicles. The loop underneath the barrier boom always serves as monitor and closing loop. Meaning, as long as a vehicle is standing on the loop, the barrier stays open. Only after the vehicle has left the loop the barrier will be closed.

Example

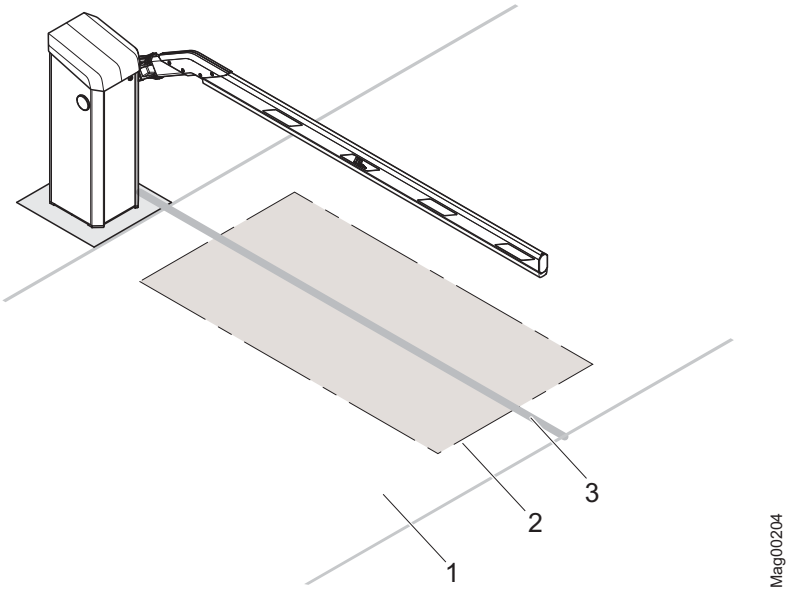

Fig. 20: Arrangement example of an induction loop for passenger car operation

1 Carriageway
2 Induction loop
3 Projection of the barrier boom onto the subsurface with a standard installation of the loop

→ The induction loop setup depends on the application case. For other application cases, refer to page 47, chapter 7.

Assembly and installation

Please observe following points when installing the induction loop:

Loop geometry and clearances

- Install the loop symmetrically to the barrier boom. Please make sure that the barrier boom is attached to the side of the barrier housing.
  → Refer from page 30, Fig. 3 to page 36, Fig. 6.
- The clearance of the safety loop for passenger cars in front of, and behind the barrier boom must be at least 500 mm. The safety loop for lorries must be dimensioned larger.
- The distance of the induction loop from the roadside should be about 300 to 500 mm.
- Install opening loops right in front of the safety loop. The clearance between opening loop and safety loop must be not greater than 1 m for lorries and passenger cars, and 0.5 m for motorcycles.
- If there are iron reinforcements, ramp heating etc. in the carriageway, the induction loop must have a clearance of at least 50 mm from those. Metals in the proximity of the induction loop affect the response sensitivity.
- Avoid direct contact of induction loops with reinforcement and ramp heating.
- Install induction loops with sufficient clearance from sliding gates, roller grilles etc.

Installation and ground conditions

- Please make sure when moulding or installing that the loop can not move anymore once it is in operation. Any geometric alteration will act as inductance change, which will set the detector to an error state.
- Brittle road surfaces, loose pavements, gravel paths etc. are not suited for the application of induction loops.

Feed line

- The feed line to the loop must not exceed 15 m.
- The loop connection cable must protrude about 1.5 m from the foundation.
- Shorten the feed line to the loop to the proper length. The feed line must by no means be coiled.
- The feed line must be twisted up to right in front of the terminals of the loop detector with approx. 20 twists per metre.

8.4.2 Induction loops

The induction loops are available as ready assembled cables in various lengths (Type KAS 1 to 5)

Alternatively a loop can be manufactured from single wire. The following requirements must be fulfilled:

- Wire cross section: 0.75 to 1.5 mm^2
- Inductance of the loop: 70 to 500 µH. This is equivalent to a loop with 3 to 6 windings.
- When using hot pouring compounds, such as bitumen temperature resistant loop cables/strands must be used.

8.4.3 Testing induction loops

To scrutiny the contact resistance, insulation resistance, and inductance of the loop must be measured after its installation:

- Contact resistance: 0.8 to 2.0 ohms
- Insulation resistance to earth: > 1 Mohm.
- Inductance of the loop: 70 to 500 µH

If the values are not within the specified ranges, the loop is defective.

8.4.4 Installing induction loops in bitumen, asphalt, or concrete

1. Cut a 50 mm deep groove into the surface or asphalt using a cutting disc. The groove must be equally deep at every point. According to Fig. 14 the corners of the groove must be cut in a 45° angle.

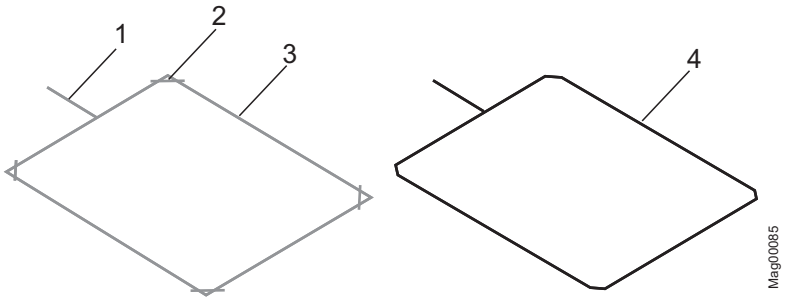

Fig. 21: Installing induction loop in bitumen, asphalt, or concrete

1 Groove for induction loop feed line
2 Corners cut diagonally
3 Groove for induction loop
4 Induction loop

Assembly and installation

2. Lay the loop carefully into the groove and push it down by means of a blunt object, such as a piece of wood. The insulation must by no means be damaged.
3. To avoid slipping of the loop, fix the loop using small wooden wedges. Remove the wooden wedges later on.
4. Push the loop feed line through the empty conduit in place into the barrier housing.
5. Measure the induction loop according to chapter 8.4.3.
6. We recommend to cover the inserted loop using quartz sand. Make sure that at least 25 mm remain between the upper edge of the carriageway and the quartz sand for the potting compound.
7. Seal the groove with the potting compound.
   - The temperature resistance of the loop must match the temperature of the potting compound.
8. Allow the potting compound to cure.

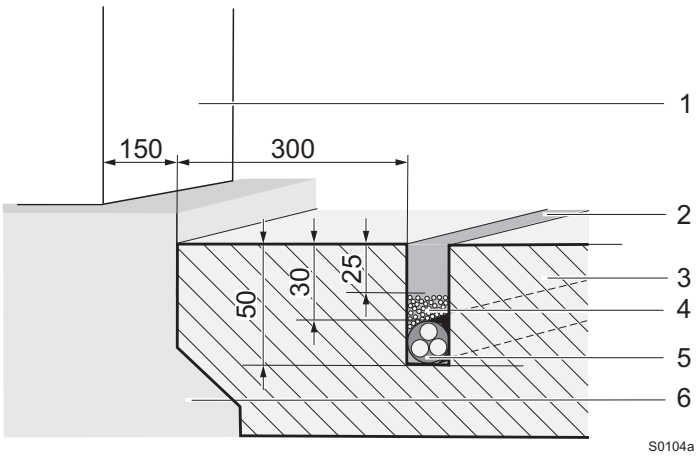

Fig. 22: Installing induction loop in bitumen, asphalt, or concrete

1 Barrier housing
2 Groove with potting compound
3 Asphalt surface
4 Quartz sand filling
5 Loop cable
6 Foundation

8.4.5 Installing induction loops under interlocking stone paving

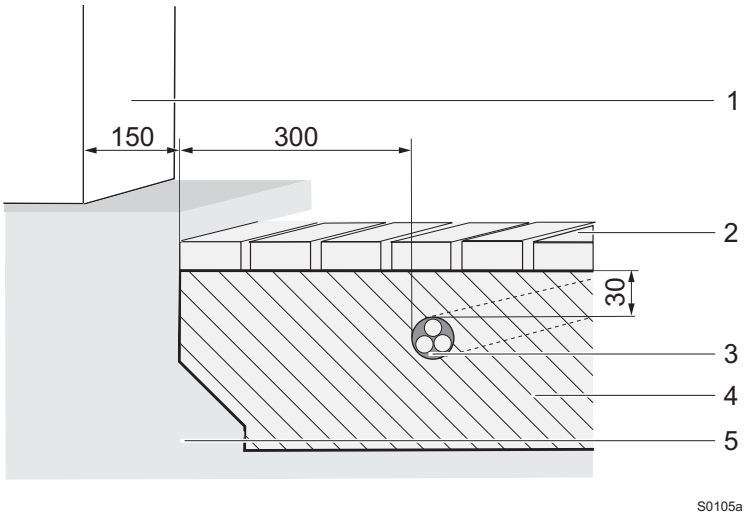

Fig. 23: Installing an induction loop under interlocking stone paving

1 Barrier housing
2 Paving
3 Loop cable
4 Sand bed
5 Substructure

When installing induction loops under interlocking stone paving, following points must be observed additionally:

- Use only pre-assembled cables provided by (Type KAS 1 to KAS 5).
- Install the induction loop in sand only. The induction loop must not be installed in gravel or split.
- The induction loop must not slip or shift or be damaged during later vehicle traffic.
- Keep a minimum clearance between paving and loop cable of approx. 30 mm.

8.5 Unpacking

The individual packages are packed according to the expected transport conditions. Only environment-friendly materials have been used for the packaging.

The packaging should protect the individual components against transport damages, corrosion, etc up to the assembly. Therefore do not destroy the packaging and remove only directly before assembly.

1. Unpack barrier.
2. Set up barrier housing vertically.
3. Lay down barrier boom.
4. Unpack and lay out accessories.
5. Separate material according to type and size and continue to use them after recycling.

8.6 Assemble housing

The barrier housing is attached by 4 foundation anchors via 2 attachment profiles. The attachment profiles are included in delivery. You can order a mounting set consisting of foundation anchor, discs, spring rings and hexagon nuts from Autocontrol GmbH as accessories.

Requirements mounting material

If you are using your own mounting material, it must meet the following requirements:

- 4 foundation anchors:
  - Features: suitable for concrete C35/45 XD3 XF2
  - Material: electrogalvanised
  - Size: M8 x 160
  - Tensile strength: at least 8.8 kN
    Foundation anchors that are optionally available from achieve the tensile strength of 8.8 kN at a drill-ing depth of 80 mm.
- 4 discs DIN 9021 d13, zinc-plated
- 4 discs DIN 9021 d8,4, zinc-plated
- 4 spring washers DIN 128 A8, zinc-plated
- 4 hexagon nuts DIN 934 M8, zinc-plated.

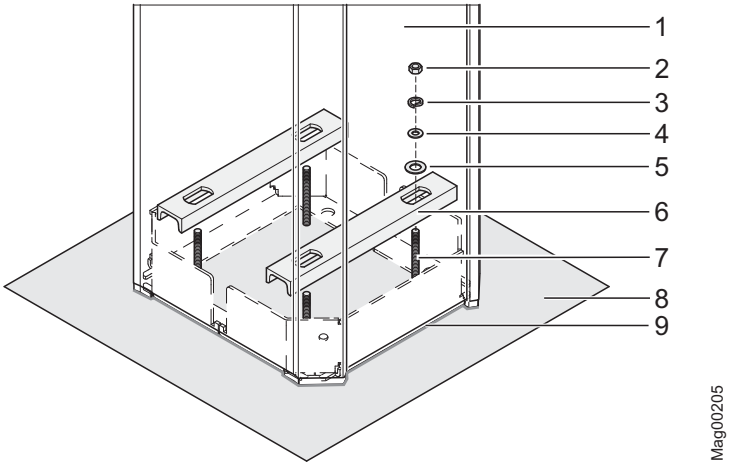

Fig. 24: Assemble housing

1 *Barrier housing*
2 *Nut*
3 *Spring washer*
4 *Disc d8,4*
5 *Disc d13*
6 *Mounting profile*
7 *Foundation anchor*
8 *Foundation*
9 *Silicon joint*

Assemble housing

1. The foundation must have cured.
2. Drill holes for the foundation anchors according to the foundation plan, page 55, Fig. 16. Compliance with the indicate sizes.
   - Drill-hole distance: 180 mm, square alignment
   - Diameter: 10 mm
   - Depth: 80 mm
     (At this drilling depth, a minimum tensile strength of 8.8 kN must be guaranteed.)
3. Set four foundation anchors M8 x 160.
4. Set up barrier housing upright on foundation.
5. Barrier housing attached to mounting profile on the foundation with foundation anchors. Tighten nuts slightly for this.
6 Align barrier housing. Tighten nuts firmly. If a nesting post or light barrier post is installed, observe page 84, chapter 8.14.
7. Seal barrier housing with silicon joint.

8.7 Assemble nesting post or light barrier post

The nesting post and the light barrier post are attached with 4 foundation anchors each. You can order a mounting set consisting of foundation anchor, discs, spring rings and hexagon nuts from Autocontrol GmbH as accessories.

Requirements mounting material

If you are using your own mounting material, it must meet the following requirements:

- 4 foundation anchors:
  - Features: suitable for concrete C35/45 XD3 XF2
  - Material: Stainless steel
  - Size: M8 x 110
  - Tensile strength: at least 9 kN
    Foundation anchors that are optionally available from achieve the tensile strength of 9 kN at a drilling depth of 80 mm.
- 4 discs DIN 9021 d8,4, stainless steel
- 4 spring washers DIN 128 A8, stainless steel
- 4 hexagon nuts DIN 934 M8, stainless steel

Assemble nesting post or light barrier post

1. The foundation must have cured.
2. Drill holes for the foundation anchors according to the foundation plan, page 58, Fig. 19. Compliance with the indicate sizes.
   - Drill-hole distance: 100 mm, square alignment
   - Diameter: 10 mm
   - Depth: 80 mm
     (At this drilling depth, a minimum tensile strength of 9 kN must be guaranteed.)
3. Set four foundation anchors M8 x 110.
4. Set up post upright on foundation.
5. Post attached on the foundation with foundation anchors. Tighten nuts tightly for this.

8.8 Assemble safety light barrier

Only safety light barriers must be used.

8.8.1 Assemble transmitter

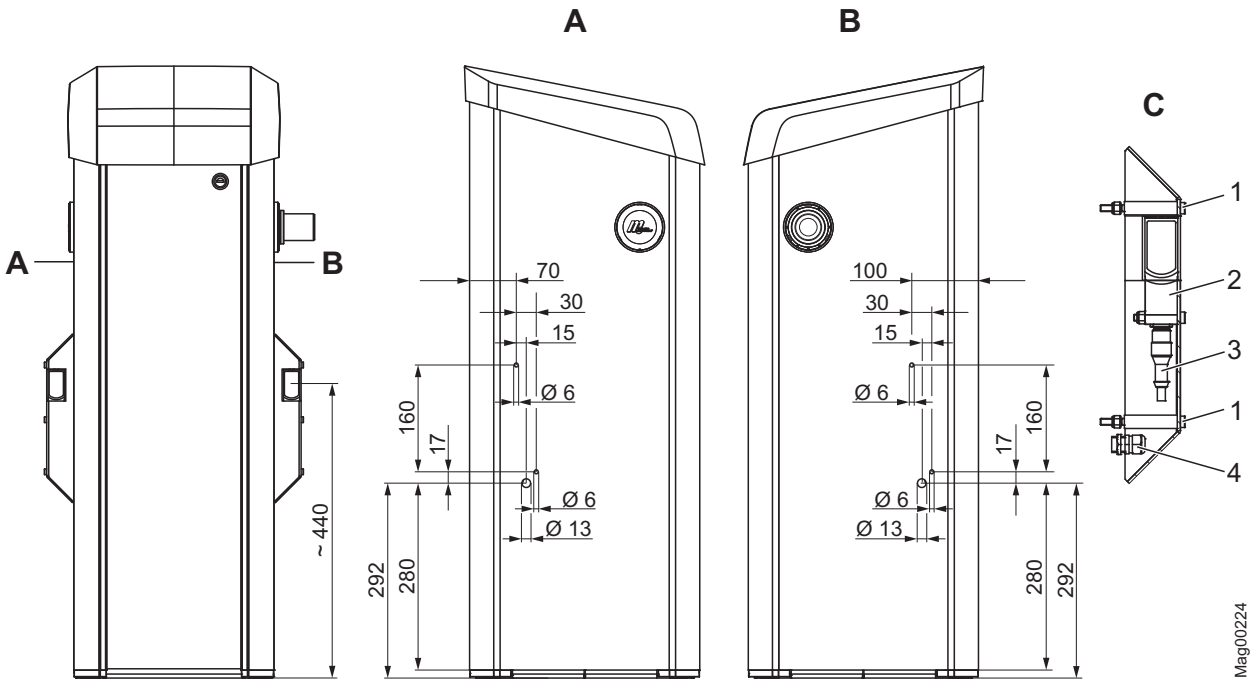

Fig. 25: Assemble of the transmitter´s light barrier housing on the barrier housing

A View A
B View B
C Light barrier housing transmitter

1 Hexagon socket screws 5 AF
2 Transmitter
3 Transmitter connection line
4 Cable screw connection

1. Drill holes for the light barrier housing according to Fig. 25. Mount the cable screws at the housing with counternut.
2. Connect connection line for transmitter to the control unit.
3. Guide connection line through cable screws.
4. Mount light barrier housing to housing with the hexagon socket screws 5 AF.

8.8.2 Assemble receiver

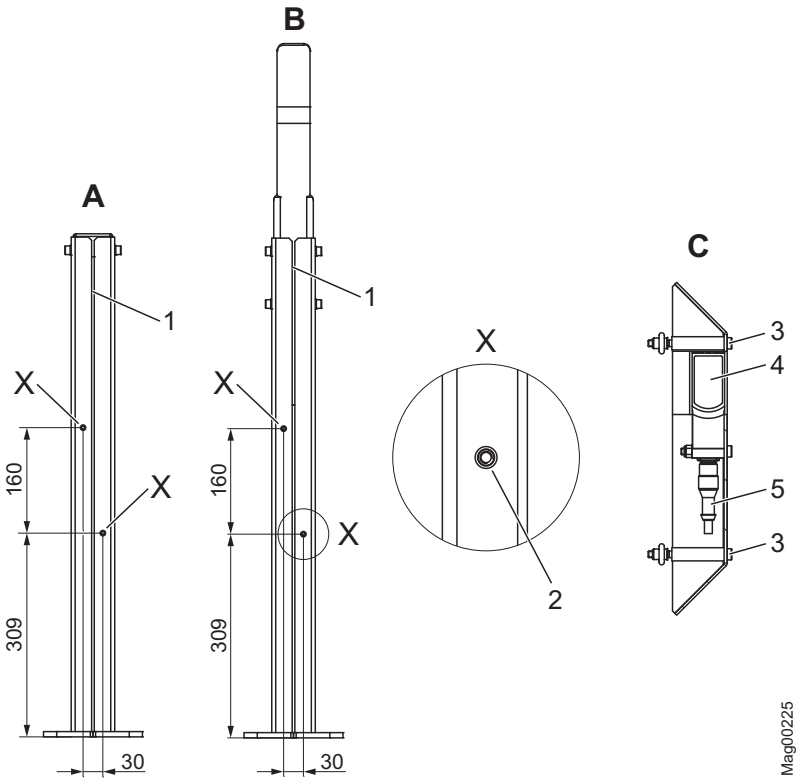

Fig. 26: Assemble the receiver's light barrier housing on the post

A Light barrier post
B Nesting post
C Light barrier housing

1 Gap
2 Drill holes for blind rivet nut
3 Hexagon socket screws 5 AF
4 Receiver
5 Receiver connection line

1. Press the two blind rivet nuts into the two intended bores at the post.
2. Guide the connection line for receiver through the gap in the post.
3. Connect connection line for receiver to the receiver.
4. Mount light barrier housing to housing with the hexagon socket screws 5 AF
5. Close empty conduits with construction foam to prevent water from entering them.

8.9 Assemble barrier boom type "VarioBoom"

The barrier boom type "VarioBoom" is delivered in two parts

- Install short barrier boom profile with assembled connection plates, half-shells and closing lids.
- Long barrier boom profile

The mounting material is included in delivery.

1. Remove transport rubbers.
2. Disassemble the two half-shells from the short barrier boom profile.
3. Slide long barrier boom profile over the two connection plates.
4. Attach long barrier boom profile to both connection plates with the 4 flat-head screws. The larger bores must remain free.
5. Attach the two half-shells with the discs and the hexagon socket screws.

8.10 Assemble edge protection

Missing edge protection at the barrier boom

⚠ WARNING!

WARNING!
Danger from missing edge protection at the barrier boom!

Missing edge protection at the barrier boom may cause severe or lethal injuries for persons, bicyclers, cabriolet drivers and motorcycle drivers when the barrier boom closes!

Therefore:

– Assemble edge protection.
– If the edge protection is damaged, it must be replaced immediately.

NOTE!

If you use a pendulum support, observe that you must mount part of the edge protection in front of the pendulum support and part of the edge protection behind the pendulum support.

The edge protection is included in the delivery loosely in 2 m pieces. If the barrier was ordered with the light strips option, the barrier boom is delivered with the mounted edge protection.

The number of edge protections is according to the length of the long barrier boom profile.

1. Measure the length of the long barrier boom profile.
2. Shorten edge protection to the required length with a saw. When the length of the barrier boom profile is, for example, 3.5 m, saw off one edge protection to 1.5 m.
3. Moisten lateral lower area of the barrier boom onto which the edge protection is pushed with water.
4. Slide edge protection in the barrier boom groove.
5. Slide further edge protections into the intended groove until the edge protection ends flush with the barrier boom.

8.11 Assembling flange and barrier boom

Danger of injury

CAUTION!

CAUTION!
Danger of injury!

There is a danger of injury when mounting the barrier boom.

Therefore:

– Barrier booms as of a length of 4.5 m must be installed by two persons. We recommend also installing shorter barrier booms with two persons.

8.11.1 Barrier boom type "VarioBoom" and "MicroBoom"

Do not grease

NOTICE!

NOTICE!
Improper lubrication of components, in particular the counter bearing or flange shaft, may lead to damage of the equipment!

Therefore:

– Do not grease the counter bearing and flange shaft.

1. Secure barrier danger area e.g. with barrier tape.
2. Remove the barrier housing hood.
3. Remove the barrier housing door.

WARNING!

Danger of crushing between barrier boom and barrier housing!

4. Switch off power supply. Ensure that the system is powered down. Secure against reactivation. The balancing springs in the lever system are relaxed.

5. Remove closing lid from the barrier boom.

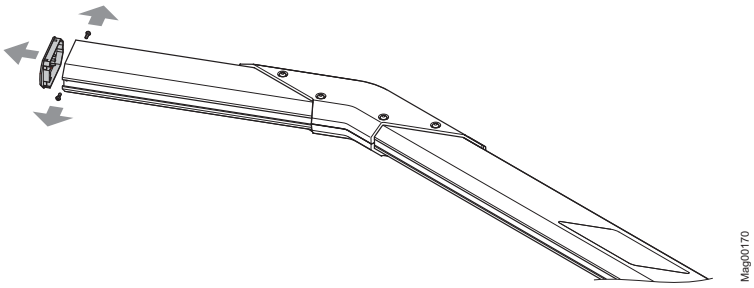

Fig. 27: Disassemble closing lid

6. Slide a slot nut into the groove at the underside of the barrier boom. Place a slot nut on the upper side of the barrier boom.

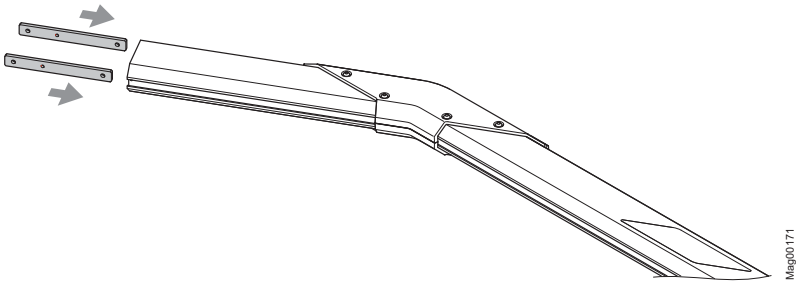

Fig. 28: Assemble slot nuts

7. Attach the flange with the 4 hexagon socket screw and the two slot nuts to the barrier boom. The shorter protrusion of the flange must point towards the barrier boom end.
   - Torque wrench with hexagon socket: 5 AF
   - Tightening torque: 16 Nm

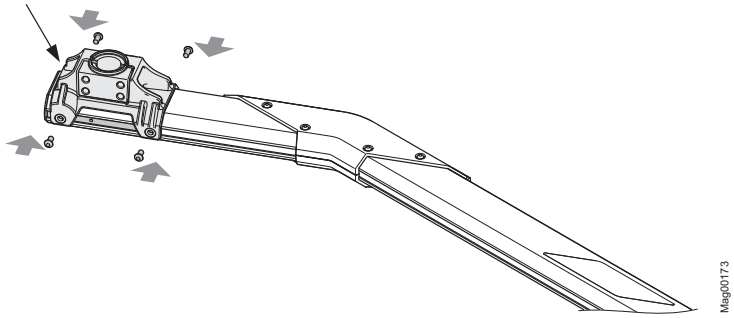

Fig. 29: Assembling flange

Assembly and installation

8. Install closing lid to the barrier boom.

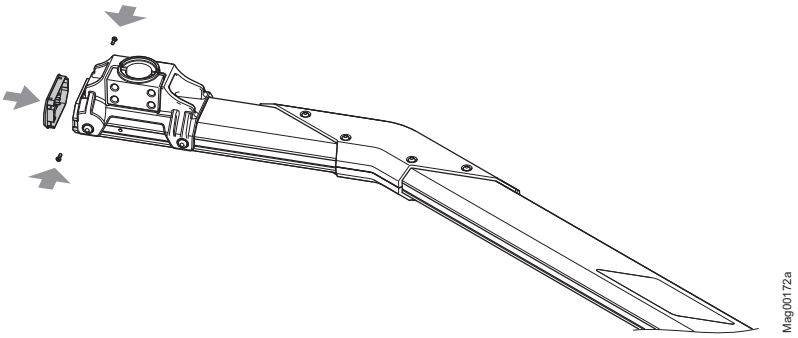

Fig. 30: Install closing lid

9. Push barrier boom with pre-assembled flange onto the flange shaft.

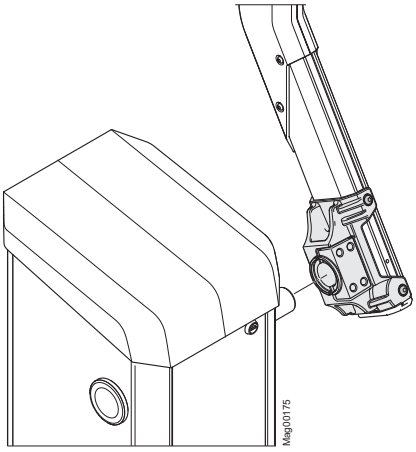

Fig. 31: Assemble flange with barrier boom

10. Align barrier boom vertically.
11. Install the flange on the flange shaft using the 4 hexagon socket screws. To tighten the screws evenly.
    - Torque wrench with hexagon socket: 10 AF
    - Tightening torque: 75 Nm
12. Close screws and threaded bores with the included grey plastic covers.

13. Push the barrier into the top-most position. The clamping lever must be at the stop for the "open" position. If required, push straight through the upper tool bore with a tool to press the lever arm from the dead point. → See page 166, chapter 13.5.
14. Check the vertical alignment of the barrier boom with a spirit level and correct with the hexagon socket screws at the flange if necessary.
15. Switch on power supply.
16. Switch the "Service" switch on the control unit. The LED lights red. The display backlighting flashes.
    → See page 120, chapter 10.7.7 Mode "Service".
17. Close the barrier with the middle right button at the control unit.
18. Check the horizontal alignment of the barrier boom with a spirit level and correct with the hexagon socket screws at the flange if necessary.
19. Switch the "Service" switch on the control unit The LED must light green.
20. Switch off power supply.
21. Install the barrier housing door.
22. Attach and lock the barrier housing hood.

8.11.2 Barrier boom type "MicroBoom-T"

1. Secure barrier danger area e.g. with barrier tape.
2. Remove the barrier housing hood.
3. Remove the barrier housing door.

WARNING!

Danger of crushing between barrier boom and barrier housing!

4. Switch off power supply. Ensure that the system is powered down. Secure against reactivation. The balancing springs in the lever system are relaxed.

Assembly and installation

5. Install the flange on the flange plates with the 2 hexagon socket screws 8 AF. Make sure:
   - Tighten the screws evenly with a tightening torque of 60 Nm.
   - That the air gap between flange and flange plate must be consistent.

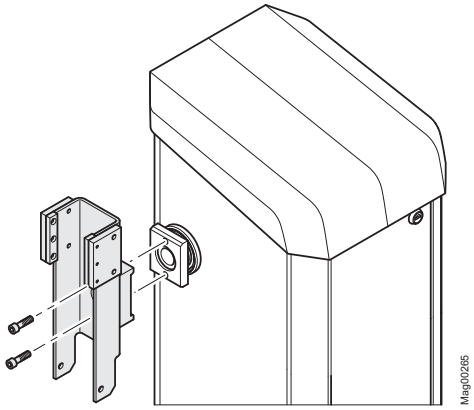

Fig. 32: Install flange to flange plate

6. Slide steel sleeve into the intended bore in the barrier boom.
7. Place barrier boom in the flange so that the barrier boom can be assembled.
8. Assemble barrier boom with hexagon screw, washer and hexagon nut.

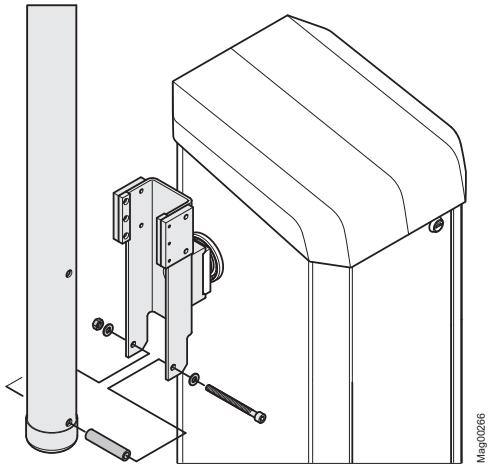

Fig. 33: Assemble barrier boom

9. Push the barrier into the top-most position. The clamping lever must be at the stop for the "open" position. If required, push straight through the upper tool bore with a tool to press the lever arm from the dead point. → See page 166, chapter 13.5.
10. Check the vertical alignment of the barrier boom with a spirit level and correct with the hexagon socket screws at the flange if necessary.
11. Switch on power supply.
12. Switch the "Service" switch on the control unit The LED lights red. The display backlighting flashes.
    → See page 120, chapter 10.7.7 Mode "Service".
13. Close the barrier with the middle right button at the control unit.
14. Check the horizontal alignment of the barrier boom with a spirit level and correct with the hexagon socket screws at the flange if necessary.
15. Switch the "Service" switch on the control unit The LED must light green.
16. Switch off power supply.
17. Install the barrier housing door.
18. Attach and lock the barrier housing hood.

8.12 Conversion "left version" – "right version" (VarioBoom and MicroBoom)

Danger of injury

⚠ CAUTION!

CAUTION!
Danger of injury!

There is a danger of injury when mounting the barrier boom.

Therefore:

– Barrier booms as of a length of 4.5 m must be installed by two persons. We recommend also installing shorter barrier booms with two persons.

Do not grease

NOTICE!

NOTICE!
Improper lubrication of components, in particular the counter bearing or flange shaft, may lead to damage of the equipment!

Therefore:

– Do not grease the counter bearing and flange shaft.

All MHTM™ MicroDrive barriers are available as "left version" and "right version". → See type code, page 29 and as of page 30, Fig. 3 to Fig. 6.

If required, you can also remove the barrier boom yourself from one side of the barrier housing and replace it on the other.

1. Secure barrier danger area e.g. with barrier tape.
2. Remove the barrier housing hood.
3. Remove the barrier housing door.

WARNING!

Danger of crushing between barrier boom and barrier housing!

4. Switch off power supply. Ensure that the system is powered down. Secure against reactivation. The balancing springs in the lever system are relaxed.
5. The barrier must be open. Open barrier boom manually if required.
6. Disassemble flange from the flange shaft together with the barrier boom. For this, loosen the 4 hexagon socket screws 10 AF at the flange.

7. Remove the flange with the barrier boom.

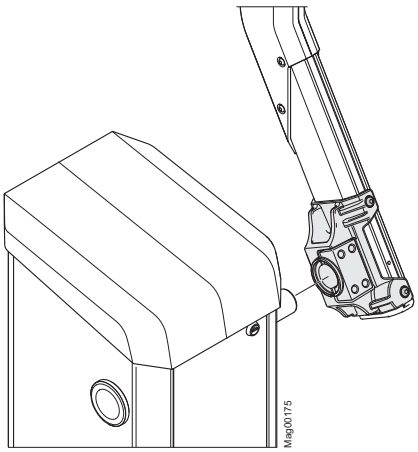

Fig. 34: Disassemble flange with barrier boom

8. Remove the v-ring from the flange shaft.

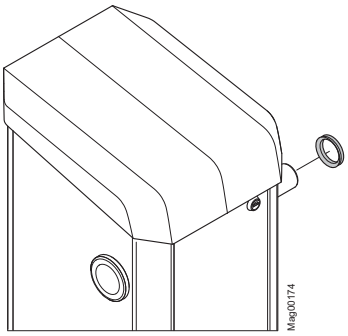

Fig. 35: Remove the v-ring

9. Slightly loosen the two hexagon socket screws 10 AF of the clamping lever at the flange shaft. Do not remove the hexagon socket screws.

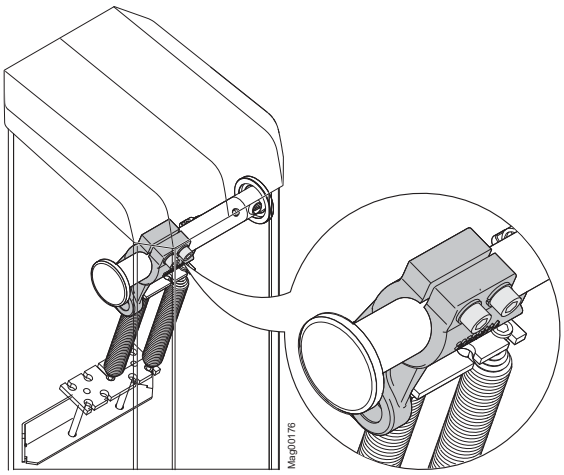

Fig. 36: Loosen hexagon socket screws at the clamping lever

Assembly and installation

10. Unhook the balancing springs in the lever system. For this, press a tool straight through the upper tool bore. The lever arm is pressed from the upper dead point → See page 166, chapter 13.5.
11. Remove the flange shaft cover disc of the barrier housing. Push a long rod through the flange shaft for this and slightly push it against the cover.
12. Push the flange shaft to the other side by turning. The flange shaft must be flush with the counter bearing on the side where the barrier is not mounted. The flange shaft points out of the barrier housing by approx. 62 mm on the other side.
13. Tighten the two hexagon socket screws of the clamping lever at the flange shaft.
    - Torque wrench with hexagon socket: 10 AF
    - Tightening torque: 120 Nm
14. Hook in the balancing springs in the lever system.
15. Slip the v-ring over the flange shaft. The sealing lip points towards the barrier housing. → See also page 77, Fig. 35.
16. Remove flange from the barrier boom. For this, loosen the 4 hexagon socket screws 5 AF at the barrier boom.
17. Attach the flange on the other side of the barrier boom. Observe position of the two slot nuts. The shorter protrusion of the flange must point towards the barrier boom end. → See also page 72, Fig. 29.
    - Torque wrench with hexagon socket: AF 5
    - Tightening torque: 16 Nm
18. Push barrier boom with pre-assembled flange onto the flange shaft.
19. Align barrier boom vertically.
20. Install the flange on the flange shaft using the 4 hexagon socket screws. To tighten the screws evenly.
    - Torque wrench with hexagon socket: 10 AF
    - Tightening torque: 75 Nm
21. Close screws and threaded bores with the included grey plastic covers.
22. Insert the cover disc for the flange shaft.
23. Push the barrier into the top-most position. The clamping lever must be at the stop for the "open" position. If required, push straight through the upper tool bore with a tool to press the lever arm from the dead point. → See page 166, chapter 13.5.
24. Check the vertical alignment of the barrier boom with a spirit level and correct with the hexagon socket screws at the flange if necessary.
25. Switch on power supply.

26. Switch the "Service" switch on the control unit The LED lights red. The display backlighting flashes.
    → See page 120, chapter 10.7.7 Mode "Service".
27. Close the barrier with the middle right button at the control unit.
28. Check the horizontal alignment of the barrier boom with a spirit level and correct with the hexagon socket screws at the flange if necessary.
29. Switch the "Service" switch on the control unit The LED must light green.
30. Switch off power supply.
31. Install the barrier housing door.
32. Attach and lock the barrier housing hood.

8.13 Check and set the balancing springs in the lever system

Danger of crushing, lever system!

⚠ WARNING!

WARNING!
Danger of crushing at opened barrier housing at the lever system!

The lever system in the barrier housing can cause serious crushing injuries!

Therefore:

- Balancing springs in the lever system must only be checked and adjusted by specialised personnel.
- Balancing springs must only be checked and adjusted with the power supply turned off
- Wear protective gloves if necessary.

The lever system has balancing springs that exactly balance the barrier boom weight. These balancing springs are pre-set in the factory. The precise setting must be performed after assembly of the barrier boom and before commissioning.

The lever force is determined not only by the spring tension but also by the number of springs used and the spring rate. MHTMTM MicroDrive barriers. uses two spring types. Depending on application case, you will have to set the spring tension, remove the springs, use additional springs or use springs with a different spring rate.
→ Also see page 82, chapter 8.13.2.

In the "Power failure" menu, you can set the barrier behaviour in case of voltage failure. → Refer to Page 133, Chapter 10.10.9. The settings in this menu do not influence the settings of the balancing springs.

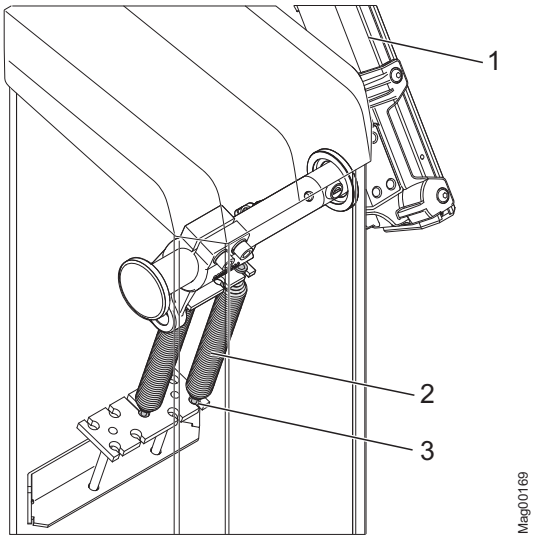

Fig. 37: Balancing springs in the lever system.

1 Barrier boom
2 Balancing spring
3 Screw with counter nuts

8.13.1 Setting balancing springs

Check and adjust balancing springs

Check balancing springs with the motor warm from operation.

1. Secure barrier danger area e.g. with barrier tape.

WARNING!

Danger of crushing between barrier boom and barrier housing!

2. Switch off power supply. Ensure that the system is powered down. Secure against reactivation.
3. Place barrier boom in the 30° position manually. If required, push straight through the upper tool bore with a tool to press the lever arm from the dead point. → See page 166, chapter 13.5.
4. Let go of barrier boom.
   - If the barrier boom stays in the 30° position, the balancing springs are set correctly.
   - If the barrier boom does not stay in the 30° position, the balancing springs must be adjusted.

Adjust balancing springs:

5. Remove the barrier housing hood.
6. Remove the rear barrier housing door.
7. Adjust springs with a wrench via the screws with counter nuts.
   - Barrier boom angle > 30°: This balancing springs are tightened too far.
   - Barrier boom angle < 30°: This balancing springs are not tightened enough.
8. Install the barrier housing door.
9. Attach and lock the barrier housing hood.

8.13.2 Overview table balancing springs

The following overview tables apply for barriers with VarioBoom.

Locking width	Number springs weak	Number springs strong
1.5…1.7 m	1	–
1.8…2.3 m	2	–
2.4…2.9 m	3	–
3.0…3.4 m	4	–
3.5…3.9 m	5	–
4.0…4.3 m	6	–
4.4…4.6 m	7	–
4.7…5.0 m	8	–
5.1…5.3 m	9	–
5.4 m	5	2
5.5…5.8 m	5	3
5.9…6.0 m	6	3

Table 21: Overview table balancing springs for VarioBoom without pendulum support

Locking width	Number springs weak	Number springs strong
3.5…3.6 m	6	–
3.7…3.9 m	7	–
4.0…4.4 m	8	–
4.5…4.7 m	9	–
4.8 m	5	2
4.9…5.3 m	5	3
5.4…5.6 m	6	3
5.7…5.8 m	5	4
5.9…6.0 m	4	5

Table 22: Overview table balancing springs for VarioBoom with pendulum support

The following overview tables apply for barriers with MicroBoom.

Locking width	Number springs weak	Number springs strong
1.5 to 2.0 m	1	–
2.1 to 2.5 m	2	–
2.6 to 3.1 m	3	–
3.2 to 3.6 m	4	–
3.7 to 4.0 m	5	–
4.1 to 4.4 m	6	–
4.5 to 4.7 m	7	–
4.8 to 5.1 m	8	–
5.2 to 5.4 m	9	
5.5 m	5	2
5.6 to 5.9 m	5	3
6.0 m	6	3

Table 23: Overview table balancing springs for MicroBoom

Locking width	Number springs weak	Number springs strong
3.5 to 3.8 m	6	–
3.9 to 4.0 m	7	–
4.1 to 4.5 m	8	–
4.6 to 4.8 m	9	–
4.9 m	5	2
5.0 to 5.4 m	5	3
5.5 to 5.7 m	6	3
5.8 to 5.9 m	5	4
6.0 m	4	5

Table 24: Overview table balancing springs for MicroBoom with pendulum support

8.14 Align barrier housing and post

Falling components

⚠ WARNING!

WARNING!
Risk of injury from falling components!

Falling components such as the barrier housing can cause severe injury!

Therefore:

- When aligning the barrier housing and nesting post, loosen the attachment screws only slightly.
- Tighten the attachment screws again after alignment.

NOTE!

You can set the nesting post height. → See page 85, chapter 8.15.

Alignment conditions for nesting post

The barrier boom must run centrally into the nesting post fork.

Alignment conditions for light barrier

Transmitter and receiver of the light barrier must be aligned with each other for an object to be securely detected. For final alignment, transmitter and receiver must be electrically connected. → See page 94, chapter 9.4.4.

1. Slightly loosen the barrier housing and post attachment screws.
2. Align barrier housing and post with each other.
3. Tighten the barrier housing and post attachment screws again.
4. Seal barrier housing with a silicon joint according to page 65, Fig. 24.

8.15 Set nesting post height

Danger of crushing

⚠ CAUTION!

CAUTION!
Crushing danger between the fork at the nesting post and the barrier boom!

Fingers and hands can be crushed when the barrier boom runs into the nesting post when closing.

Therefore:

- Switch off power supply during assembly.
- Do not hold on to fork from the inside. Wear safety gloves if required.

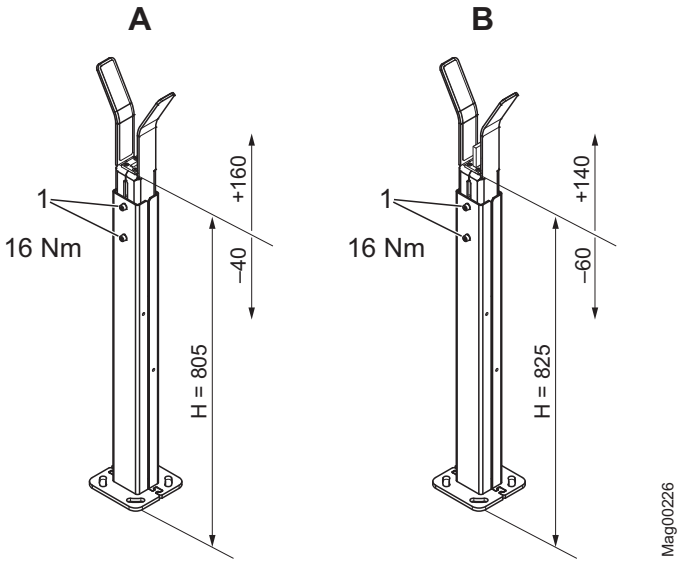

Fig. 38: Set nesting post height.

A Nesting post
B Nesting post with lock
H Reference height

1 Torx screws

You may set the nesting post height, e.g. to balance out level differences in the foundations.

1. Loosen the two Torx screws until the nesting post fork can be moved. Hold on to the fork.
2. Set the fork to the desired height.
3. Tighten the two Torx screws with 16 Nm.

8.16 Stick on prohibition signs

The delivery includes two prohibition signs as stickers. Attach the prohibition signs to the barrier boom according to the following drawing.

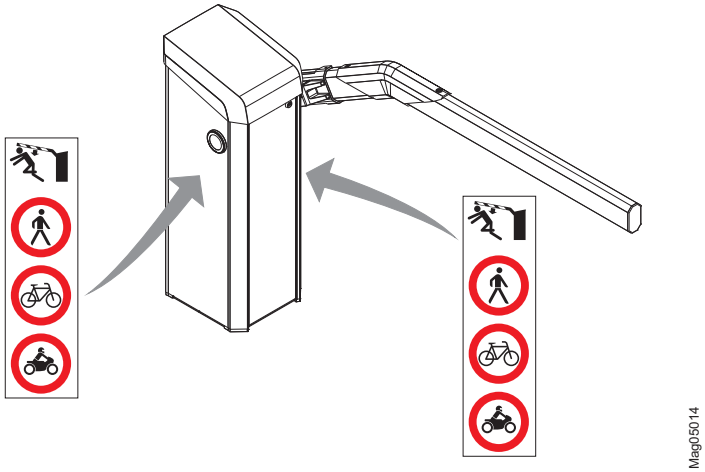

Fig. 39: Apply prohibition signs, shown here for barrier type "Access/Parking"

NOTE!

When a motorcycle loop is installed, the lower prohibition sign must be cut off.

8.17 Check assembly and installation

The following points must be checked after assembly and installation of the barrier:

- Are all foundation anchors firmly fixed?
- Are all screws firmly tightened?
- Have all barrier housing covers been properly assembled?

9 Electrical connection

9.1 Safety

→ See also safety notes on page 19, chapter 2.6 "Occupational safety and special dangers".

Electric voltage

⚠ DANGER!

DANGER!
Mortal danger by electric voltage!

Touching live parts can be lethal.

Damage to the insulation or to individual components can be lethal.

Therefore:

- Switch off the power supply immediately in case of damage to the insulation and arrange repair.
- Only electrical specialists may carry out work on the electrical system.
- Switch off power supply and secure against reactivation before performing any work. Test for absence of voltage!
- Never bypass or deactivate fuses.
- When replacing fuses observe the correct amperage specification.
- Keep moisture and dust away from live parts. Moisture or dust may cause a short circuit. If the electrical connection is established at precipitation, e.g. rain or snow, penetration of moisture must be prevented by suitable measures, such as a protective cover.

General

⚠ WARNING!

WARNING!
Danger by inappropriate installation!

Inappropriate installation can cause severe or lethal injuries.

Therefore:

- Only electrical specialists must perform any electrical installation tasks.
- Pay attention to tidiness and cleanness at the assembly site! Loosely stacked or lying around components and tools are accident sources.
- Tighten all screws correctly.

Hot surfaces

⚠ CAUTION!

CAUTION!
Danger of burns!

The motor surface may be hot. Touching this hot surface can lead to burns.

Therefore:

- Do not touch these hot surfaces.
- After switching off the power supply wait some minutes until the motor has cooled down.
- Wear protective gloves if necessary.

Electromagnetic interference

NOTICE!

NOTICE!
Electromagnetic interferences may cause malfunctions of the barrier or adjacent devices!

The barrier is approved for industrial, residential, commercial a business use. Operation in other electro-magnetic environmental conditions may cause interferences or malfunctions.

Therefore:

- Place control lines and mains cables into separate conduits
- Use cables according to the electrical circuit plan.
- Only install and apply additional parts approved by MHTMTM MicroDrive barriers.
- The electrical and electronically additional parts must be EMC verified and must not exceed the indicated EMC limit values.

Personal protective equipment

The following must be worn during all installation work:

- Work clothes
- Protective gloves
- Safety shoes
- Protective helmet.

9.2 Installing electrical protective devices

The safety installations that are required according to regional and local regulations must be provided by the customer. Usually these are:

- Residual current device (RCD)
- Circuit-breaker
- Lockable 2-pole main switch acc. to EN 60947-3.

9.3 Connecting the power cable

Electric voltage

⚠ DANGER!

DANGER!
Mortal danger by electric shock!

If the mains supply is not connected to the terminal clamps correctly, loosens from the connection clamps and touches the housing or door, there is a direct danger to life from electric shock.

Therefore:

- Only electrical specialists may carry out work on the electrical system.
- Connect power supply according to the following description.
- Install electrical protective devices according to chapter 9.2.

NOTE!

The wire cross-section of the mains line must be between 1.5 and 4 mm². Observe national provisions on line length and associated cable cross-section.

DANGER!

Mortal danger by electric voltage!

1. Disconnect barrier system power supply. Ensure that the system is powered down. Secure against reactivation.

Strip-off cable and core insulation – preparation of the wiring

2. Strip-off mains supply and cores according to the following figure.

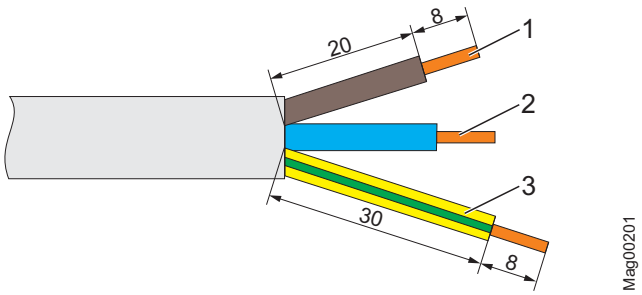

Fig. 40: Strip-off the mains supply

1 Phase
2 Zero conductor
3 Earth conductor

Electrical connection

Mains supply placement

3. Connect the mains supply with the intended terminal clamps X1: L / N / PE) in the barrier housing according to the following figures → Also refer to page 179, chapter 17.1 "Wiring diagram".
   - Place mains supply properly in the barrier housing. The line must not get into moving components.
   - Attach power supply to the metal tabs with 2 cable ties.

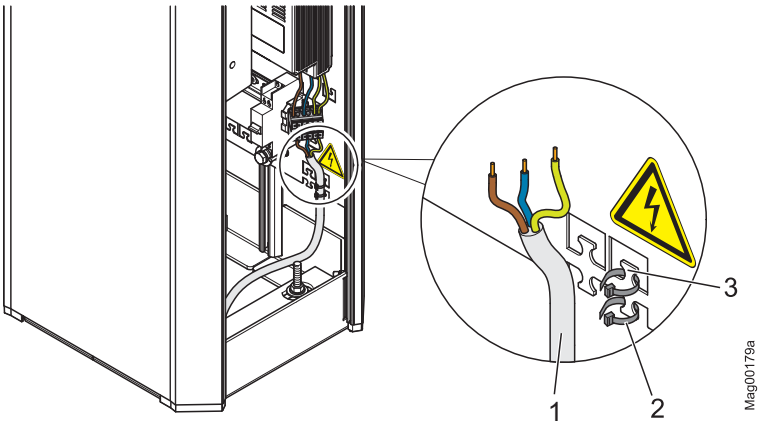

Fig. 41: Mains supply placement

1 Mains supply
2 Cable tie
3 Cable tie metal tabs

Connecting mains supply

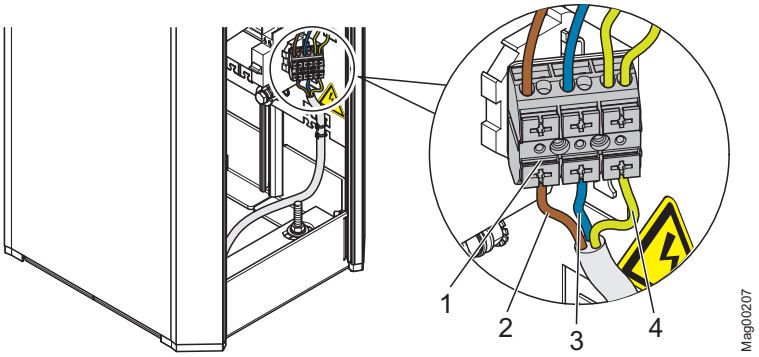

Fig. 42: Connecting the mains supply

1 Terminal clamps for mains supply
2 Phase L
3 Zero conductor N
4 Earth conductor PE

9.4 Connect customer's control lines (signalling devices)

The following connections are available for control and feedback on customer's side:

- 8 Digital inputs for controlling the barrier.
- 4 Digital outputs to feed back information.
- 6 Relays outputs to feed back information. 3 Relays are normally-open (NO) and 3 relays are change-over contacts.

DANGER!

Mortal danger by electric voltage!

1. Disconnect barrier system power supply. Ensure that the system is powered down. Secure against reactivation.

Connecting the control lines

2. Guide control lines into the connection space through the line penetrations.
   - Place control lines properly in the barrier housing. The control lines must not get into moving components.
   - Attach control lines clamps and cable ties. The clamps can be removed from the rail by slight compression and relocated in the desired position. The cable ties can be attached to the metal tabs.
3. Connect control lines according to wiring diagram.
   → See page 179, chapter 17.1 "Wiring diagrams".

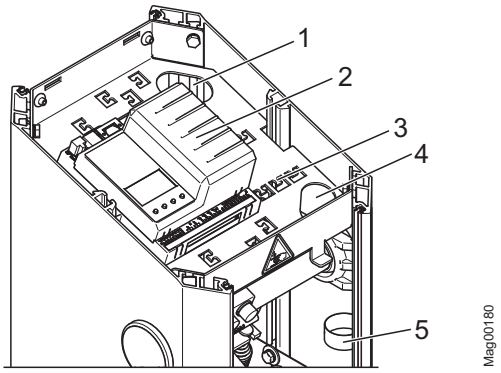

Fig. 43: Connecting the control lines

1 Line penetration rear
2 Control unit
3 Cable tie metal tabs
4 Line penetration front
5 Cable clamps

9.4.1 Connecting safety devices

As safety devices, you must connect safety loops or safety light barriers to the control unit. Safety loops must only be connected to monitor vehicles. Only afety light barriers must be used.

If you connect a safety loop, the barrier closes only after the safety loop is clear. If you connect a safety light barrier, the barrier closes only after the safety light barrier is clear.

9.4.2 Plausibility check of the safety devices

To prevent the barrier from being operated without safety devices, a plausibility check of the safety devices is performed.

The plausibility check inspects whether at least one safety device is present and whether the safety device works correctly in operation.

When the voltage supply is switched on, it is verified that at least one safety device was passed by a vehicle or person within three barrier openings. In operation, the number is increased to ten barrier openings.

If the plausibility check fails, the barrier is decommissioned for reasons of safety. The message “Safety device missing" appears on the display.

NOTE!

The input function "Safety device" must only be used for additional safety devices. The input function is not considered for the plausibility check. A safety loop always has to be connected to the detector module or a testable safety lift barrier to the clamps X11 and X20.

9.4.3 Connecting safety loop

The safety loop is connected to the plug-in module "Detector1 (A-B)", clamps A or clamps B. → See page 179, chapter 17.1 "Wiring diagrams".

The clamp function parameters can be set in the menu "Detector 1 (A-B)" with the parameters "Mode A" or "Mode B". → See page 141, chapter 10.15.

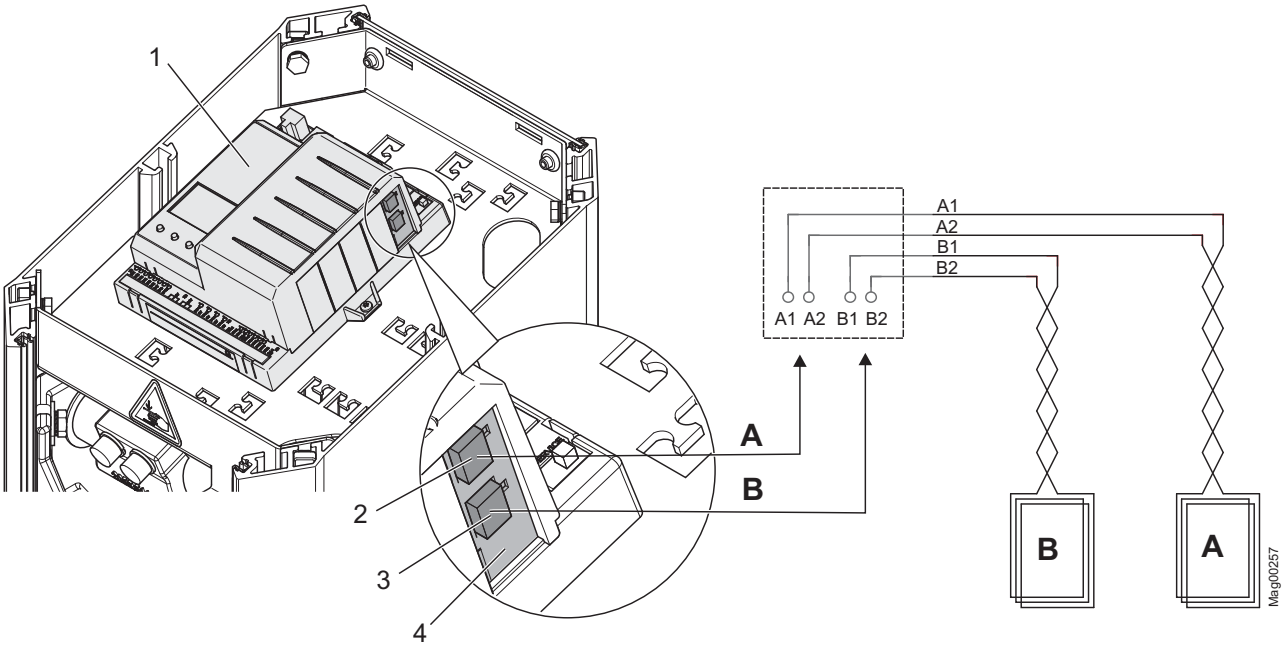

Fig. 44: Connecting safety loop

1 Control unit
2 Connection of induction loop A
3 Plug-in module "Detector 1 (A-B)"
4 Connection of induction loop B
A Induction loop A
B Induction loop B

NOTE!

If four induction loops must be supervised, you can connect another plug-in module with the "Detector" function into the control unit. This plug-in module registers as "Detector 2 (C-D)". To prevent mutual interference between the induction loops, we recommend using a plug-in module instead of an external detector.

9.4.4 Connect and test the safety light barriers

Connecting safety light barrier

Connect the transmitter and receiver connection lines of the safety light barriers to clamps X11 and X20.

By default, installs a jumper between terminals X11 OUT and IN. When a safety light barrier is connected, the jumper must be removed.

→ See page 179, chapter 17.1 "Wiring diagrams".

Aligning the safety light barrier

The receiver is mounted at the post and the transmitter at the barrier housing.

1. There must not be any objects between the transmitter and receiver. The light path must be free.
2. Switch on power supply.
3. The green LEDs at the transmitter and receiver must be lit.
4. Align receiver with transmitter. The yellow LED at the receiver lights up when aligned correctly.
5. Slightly loosen the attachment screws from the post to align the receiver. It must be possible to turn the post.
6. Turn the post, until the yellow LED at the receiver is lit.

Check safety light barrier function

Perform function test by holding an object into the light path between the transmitter and receiver.

The following items must be met:

- The yellow LED at the receiver must go out.
- The barrier cannot be closed.

9.4.5 Connecting emergency opening contacts

Fire-fighter switch, emergency opening contacts, etc. are connected to the "Open high priority" input. When the signal is applied to this input, the barrier opens. While the signal is present, the barrier cannot be closed.

→ See page 89, chapter 9.4.6 "Digital inputs" and page 179, chapter 17.1 "Wiring diagram".

9.4.6 Digital inputs

Improper parameterisation

⚠ WARNING!

WARNING!
Risk of injury by improper parameterisation of the control unit!

Improper parameterisation of the control unit can lead to severe injuries!

Therefore:

- The parameterisation of the control unit may only be carried out by qualified personnel or professional electricians.
- The electrical connection of the signal generators to the IN1 to IN8 inputs must fit the parameterisation.

Technical data

→ See page 38, chapter 4.5.

NOTE!

The digital input functions can be freely parameterised for the following versions:

- *Access Pro, Access Pro L, Access Pro H, Access Select and Access Select L*
- *Parking Pro and Parking Select*

For the remaining versions, the inputs are firmly assigned. → For input parameterisation, refer to page 103, chapter 10.

Factory setting

Clamp	Description	Function
IN1	Input 1	Open low priority
IN2	Input 2	Open low priority
IN3	Input 3	Opening with vend count
IN4	Input 4	Open high priority
IN5	Input 5	External opening loop exit
IN6	Input 6	Close
IN7	Input 7	Close
IN8	Input 8	Boom contact

Table 25: Factory settings "Digital inputs"

Electrical connection

The functions have different priorities towards each other. The function "Open high priority" has the highest priority (priority 1). I.e. all other functions, such as "Open low priority", "Close", etc. are ignored if the function "Open high priority" is active.

Function	Description
Open high priority	Connect fire fighter switch, emergency opening contacts, etc. to this input. This input has the highest priority. The barrier opens when +24 V DC are applied to this input. While the signal is present, the barrier cannot be closed. This input must not be used for opening loops. This input function is superordinated to all other input functions.
Open low priority ■ Programme modes 2, 4 to 8: Open low priority ■ Programme mode 3: Close/Open	Depending on programme mode, a permanent signal or impulse is required. ■ Programme modes 2, 4 to 8: The barrier opens when +24 V DC are applied to this input. ■ Programme mode 3: The barrier changes its state with every impulse, i.e. the barrier closes or opens.
Open exit [1)]	This function is used for selective counting, e.g. for permanent renters of a parking space.
Opening with vend count [1)]	An internal vend count counts the impulses present at this input. The impulse must be present for approx. 100 to 300 ms. The reset behaviour of the vend count can be set by the "Reset behaviour" parameter.
Close	Depending on programme mode, a permanent signal or impulse is required. The barrier closes when +24 V DC are applied to this input.
Close low priority	The function "Close low priority" is subordinated to all opening functions. The barrier closes when +24 V DC are applied to this input.
Inhibit opening loop	When +24 V DC are applied to this input, all opening commands except for the "Open high priority" and "Open exit" signals are ignored. This input function has no function in the programme modes 1 to 4.
Inhibit signal light	Signal lights are no longer controlled when +24 V DC are applied to this input.
External opening loop entry [1)]	The barrier opens when +24 V DC are applied to this input. Connect external opening loops to this input.
External opening loop exit [1)]	The barrier opens when +24 V DC are applied to this input. Connect external opening loops to this input.
External impact detection	You can install external impact detection to the barrier boom. While no vehicle touches the barrier boom from below, the input "External Impact detection" has +24 V DC applied. When the barrier boom impacts a vehicle, e.g. due to impermissible driving through of a vehicle, the +24 V DC are removed from the input "External impact detection". The barrier's behaviour in case of impact detection can be set in the "impact settings" menu. → See page 128, chapter 10.10.7.
Boom contact input	The barrier is equipped with a boom release input in the flange. While the barrier boom is in its correct position, +24 V DC are applied to the "Boom contact input" input. When the barrier boom is moved from its position e.g. by a collision with a vehicle, the +24 V DC are removed from the "Boom contact input" input. The barrier moves into the "open" position. The boom contact must be activated in the menu "Boom contact settings". → Refer to Page 138, Chapter 10.11.2

Function	Description
Safety device	The barrier can no longer be closed when +0 V DC are applied to this input. If the barrier is just closing when the input signal changes to 0 V and the cut off angle has not been undercut yet, the barrier will open again. This input must only be used in addition to the internal detector module or/and the safety light barriers connected to clamp X11. Only the internal safety devices are monitored.
Acknowledgment	This input is required for parallel operation. → For more information on parallel operation, see separate instructions.

1) The parameter is only sensible for the automatic programme modes 5 to 8.

Table 26: Function "Digital inputs"

9.4.7 Digital outputs and output relays

Technical data

→ See page 38, chapter 4.5.

NOTE!

The digital output functions can be freely parameterised for the following versions:

- *Access Pro, Access Pro L, Access Pro H, Access Select and Access Select L*
- *Parking Pro and Parking Select*

For the remaining versions, the outputs are firmly assigned. → For output parameterisation, refer to page 103, chapter 10.

Factory setting

Clamp	Description	Function
DO1	Digital output 1	Boom locking
DO2	Digital output 2	Pulse after passage
DO3	Digital output 3	Signal light A
DO4	Digital output 4	Signal light B
NO1	Relay 1	Open
NO2	Relay 2	Closed
NO3	Relay 3	Error
NO4/NC4	Relay 4	Loop active A
NO5/NC5	Relay 5	Loop active B
NO6/NC6	Relay 6	Signal light C

Table 27: Factory settings "Digital outputs" and "Relay outputs"

Electrical connection

Function	Description
Error	When the control unit recognises any "safety-relevant error" or "error", the output with this function is reactivated (Fail safe).
Warning	When the control unit recognises any "Warning", the output with this function is reactivated (Fail safe).
Closed	When the barrier is closed, the output with this function is active.
Open	When the barrier is open, the output with this function is active.
Closing	While the barrier closes, the output with this function is active.
Opening	While the barrier opens, the output with this function is active.
Boom angle	This function is used to set the upper and lower angles. When the barrier boom is within this angle range, the output with this function is active. When the barrier boom is outside of the angle range set, the output is inactive. The upper and lower angle can be set for values between 0° and 90°.
Pulse after passage	When a passage was detected, this output emits a counter pulse of 300 ms with this function. Passage is possible in either direction.
Sliding door pulse	This output is used to control a sliding gate. When the barrier is open, the output with this function emits a counter pulse of 300 ms with this function.
Boom contact FB (Boom contact feedback)	The barrier can optionally be equipped with a boom contact in the flange. When the boom contact triggers, the output with this function is deactivated (fail safe). The output is activated again once the boom contact is re-established and the boom is opened again entirely.
Boom locking	The barrier can optionally be equipped with a boom lock. This output serves control of the electro-mechanical boom lock at the end of the barrier boom. When the barrier is closed, the boom lock is activated via this output. If a signal is present for opening, the boom lock is removed first. The barrier opens with a short delay. The parameter "With boom locking" must be activated in the menu "Boom locking". → See page 139, chapter 10.11.3.
Parallel operation	This output can be used to operate two barriers synchronously. This output function must be activated via the menu "Master/Slave". → See page 134, chapter 10.10.11. → For information on parallel operation, see separate instructions.
Acknowledgment	This output is required for parallel operation. → For information on parallel operation, see separate instructions.
Signal light A	This output is used to control a signal light. The function of this output can be parameterised via the parameter "Signal light A", page 135, chapter 10.11.1.
Signal light B	This output is used to control a signal light. The function of this output can be parameterised via the parameter "Signal light B", page 135, chapter 10.11.1.
Signal light C	This output is used to control a signal light. The function of this output can be parameterised via the parameter "Signal light C", page 135, chapter 10.11.1.
Loop active A	When the induction loop A is busy, the output with this function is active.
Loop active B	When the induction loop B is busy, the output with this function is active.
Loop active pulse A	When a vehicle drives into loop A (rising flank), the output with this function emits an impulse.

Electrical connection

Function	Description
Loop active pulse B	When a vehicle drives into loop B (rising flank), the output with this function emits an impulse.
Loop inactive pulse A	When a vehicle drives out of loop A (falling flank), the output with this function emits an impulse.
Loop inactive pulse B	When a vehicle drives out of loop B (falling flank), the output with this function emits an impulse.
Direction 1 Pls A => B	The vehicle drives from direction A to B. When the vehicle leaves loop A in the direction of loop B, this output emits a counter impulse of 300 ms. 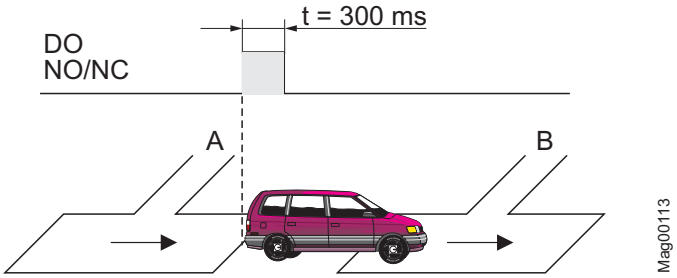
Direction 1 Pls B => A	The vehicle drives from direction B to A. When the vehicle leaves loop B in the direction of loop A, this output emits a counter impulse of 300 ms. 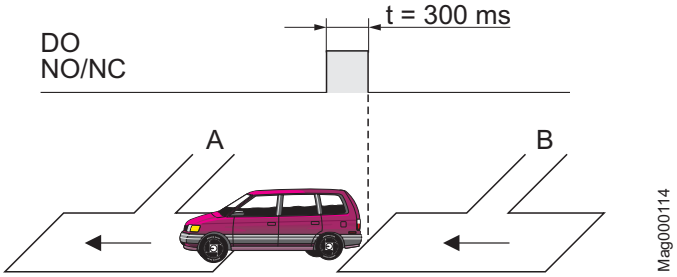
Direction 2 Pls A => B	The vehicle drives from direction A to B. When the vehicle drives on loop A in the direction of loop B, this output emits a counter impulse of 300 ms. 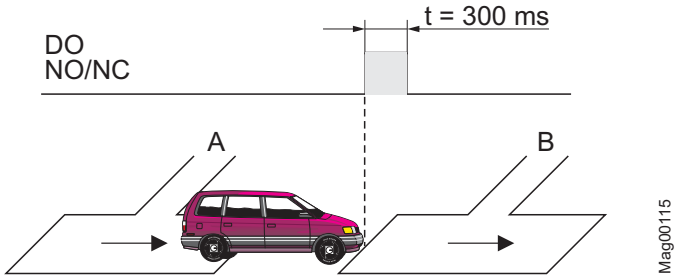

Electrical connection

Function	Description
Direction 2 Pls B => A	The vehicle drives from direction B to A. When the vehicle drives on loop B in the direction of loop A, this output emits a counter impulse of 300 ms. 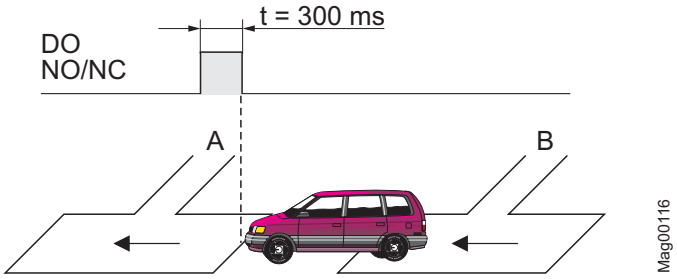
Direction 1 A => B	The vehicle drives from direction A to B. When the vehicle leaves loop A, this output starts emitting a permanent signal. When the vehicle leaves loop B, this output stops the permanent signal. This function can be used, e.g. to control traffic lights. 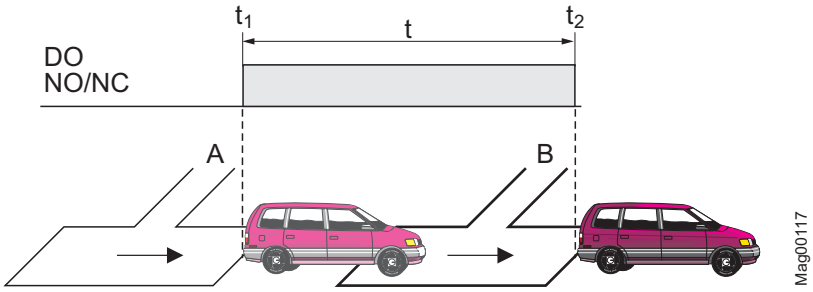
Direction 1 B => A	The vehicle drives from direction B to A. When the vehicle leaves loop B, this output starts emitting a continuous signal. When the vehicle leaves loop A, this output stops the permanent signal. This function can be used, e.g. to control traffic lights. 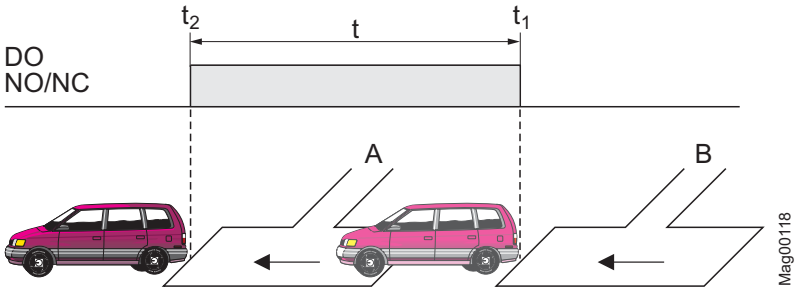

Function	Description
Direction 2 A => B	The vehicle drives from direction A to B. When the vehicle enters loop B, this output starts emitting a continuous signal. When the vehicle leaves loop B, this output stops the permanent signal. This function can be used, e.g. to control traffic lights. 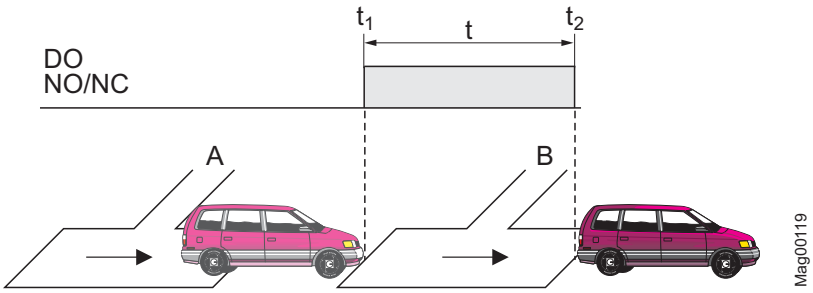
Direction 2 B => A	The vehicle drives from direction B to A. When the vehicle enters loop A, this output starts emitting a continuous signal. When the vehicle leaves loop A, this output stops the permanent signal. This function can be used, e.g. to control traffic lights. 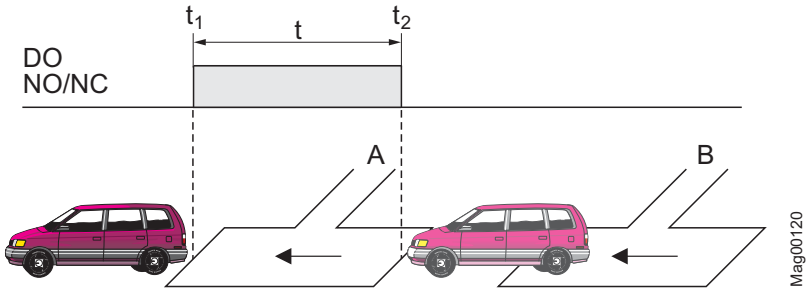
Module-Open prior	This output function can be used to issue the command "Open high priority" of plug-in modules like "Ethernet" or "Radio".
Module-Open	This output function can be used to issue the command "Open" of plug-in modules like "Ethernet" or "Radio".
Module-Close	This output function can be used to issue the command "Close" of plug-in modules like "Ethernet" or "Radio".

Table 28: Function "Digital outputs" and "Output relay"

9.5 Checking the electrical connection

The following points have to be checked after the electrical installation of the barrier:

- Are the following electrical protective devices installed: lockable 2-pole main switch, circuit breaker and leakage current fault interrupter?
- Is the power cable connected to the terminal in compliance with chapter 9.3?
- Are the induction loops connected according to the wiring diagram?
- Are the safety light barriers connected according to the wiring diagram?
- Are the control lines connected according to wiring diagram?
- Have all barrier housing covers been properly assembled?

10 Parameterising control unit

10.1 Safety

→ See also safety notes on page 19, chapter 2.6 "Occupational safety and special dangers".

Improper parameterisation

⚠ WARNING!

WARNING!
Risk of injury by improper parameterisation of the control unit!

Improper parameterisation of the control unit can lead to severe injuries!

Therefore:

– The parameterisation of the control unit may only be carried out by qualified personnel or professional electricians.
– The electrical connection of the signal generators to the IN1 to IN8 inputs must fit the parameterisation.

10.2 Control elements control unit

Control elements control unit MGC (Gate Controller)

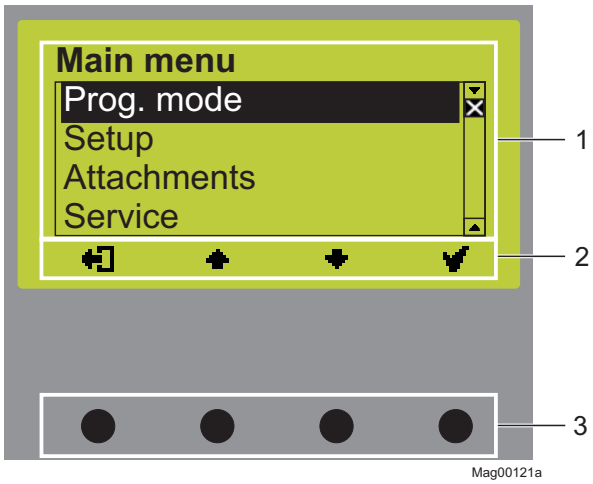

Fig. 45: Control unit elements MGC

1 Menu
2 Current function of the 4 control buttons
3 Control buttons

10.3 Displays on the control unit

Example "Operational view"

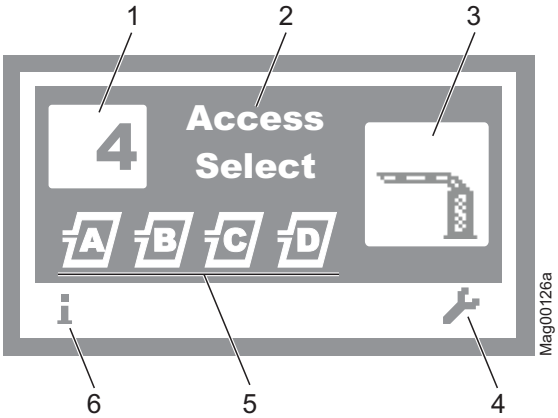

Fig. 46: Example "Operational view"

1 *Programme mode, here programme mode 4*
2 *Barrier type, here type "Access Select"*
3 *Current state of the barrier, here barrier closed*
4 *Current function of the right control button, here calling menu "Main menu"*
5 *Current state of the induction loops*
6 *Current function of the left control button, here calling menu "Information"*

Example "Screen change value"

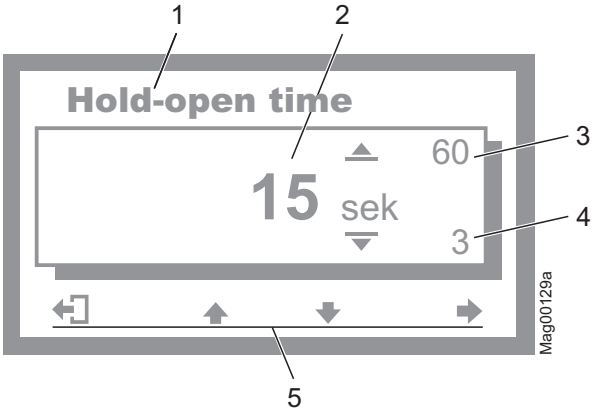

Fig. 47: Example "Screen Change value"

1 *Parameter*
2 *Current value*
3 *Possible upper value*
4 *Possible lower value*
5 *Current functions control buttons*

10.4 Symbols in the display

10.4.1 Control button functions

The control unit is equipped with 4 control buttons. The function of the control buttons change depending on the current view in the display. The current functions are displayed.

Symbols	Description
	■ Call menu "Information". ■ Scroll menu "Information".
	■ Call menu "Main menu" Make all settings in the menu "Main menu". ■ Menu "Information" → Menu "Detector": Perform reference of the induction loops.
	Leave current menu level. The next-higher menu level is displayed.
	■ Call next-lower menu level. ■ Select desired option or desired value. When the desired option was selected, the symbol is displayed.
	Option was selected but not yet stored
	■ Within one menu level: Move cursor (market) upwards. ■ For setting value: Increase figure.
	■ Within one menu level: Move cursor (market) downwards. ■ For setting value: Decrease figure.
	■ Move cursor one position to the right. ■ Menu "Information" → Menu "Detector", for plug-in module "Detector (C-D)": Call view "Detector (C-D)" and switch between "Detector (A-B)" and "Detector (C-D)".
	Programme mode "Service": Manually open the barrier.
	Programme mode "Service": Manually close the barrier.
	■ Delete error message. ■ When changing settings: Cancel changing process.

Table 29: Control button functions

10.4.2 Current state of the barrier

The barrier can have the following states:

Symbols	Description
	Barrier boom closed.
	Barrier boom open.
	Barrier boom opens.
	Closing signal was recognised. Traffic lights active. Barrier closes in 5 seconds. Time for traffic light lead is counted down.
	Barrier boom closes.
	Monitoring unit used.
	Barrier boom position unknown. "Homing" active.
	Barrier boom stopped
	An error is present.

Table 30: Current state of the barrier

10.4.3 Current programme mode

Symbols	Description
	Current programme mode, here programme mode 4 → For description of programme modes, refer to page 110, chapter 10.7.
	Programme mode "Service" → For description of programme mode "Service", refer to page 120, chapter 10.7.7.

Table 31: Current programme mode

10.4.4 Current state of the induction loops

The induction loops can have the following states:

Symbols	Description
	Loop A and B connected. The induction loop function is OK. If the icon flashes, the loop is occupied. If another "detector" plug-in module is connected, these induction loops are marked "C" and "D".
	The induction loop assumes the function of the safety loop. → See page 141, chapter 10.15.
	Reference is performed.
	Induction loop deactivated.
	Induction loop defective.

Table 32: Current state of the induction loops

10.4.5 Further symbols

Symbols	Description
	Wrong password entered. Access denied.
	Reset values to factory settings. Enter the password "0000" for this.

Table 33: Further symbols

10.5 Parameterising options

→ Menu setup, refer to page 187.

→ Programme modes overview, refer to page 110.

Example: Select programme mode

1. The operating view is displayed. → See page 104, Fig. 46.
2. Press right control button .
3. The "Main menu" menu is displayed.
4. The "Programme mode" menu is highlighted with a dark background and therefore selected. If required, select the "Programme mode" menu with the two middle buttons , .
5. Confirm selection with the right control button .
6. A list with the possible programme modes is displayed.
7. Select the desired programme mode with the two middle buttons , .
8. Use the right button to select the new programming mode. Your selection is marked with the symbol .
9. Use the left button to leave the "Programme mode" menu.
10. The safety prompt "Save changes?" appears.
    - If the changes are to be saved, press the right button . The new programme mode is activated.
    - If the changes are not to be saved, press the left button . The previous programme mode remains active.
11. The "Main menu" menu is displayed.
12. Use the left button to leave the "Main menu" menu. The operating view is displayed.

10.6 Parameterising values

Example: Change hold-open time

1. The operating view is displayed. → See page 104, Fig. 46.
2. Press right control button 🔧.
3. The "Main menu" menu is displayed.
4. Select the menu "Setup" with the two middle buttons ▲ , ▼.
5. Confirm selection with the right control button ✔.
6. Select the menu "Delays" with the two middle buttons ▲ , ▼.
7. Press right control button ✔.
8. The "Hold-open time" parameter is highlighted with a dark background and therefore selected. If required, select the "Hold-open time" parameter with the two middle buttons ▲ , ▼.
9. Press right control button ✔.
10. The current hold-open time value is displayed. The cursor flashes on the first digit.
11. Use the middle buttons ▲ , ▼ to set the desired digit.
12. Use the right button ➡ to move the cursor to the right.
13. The cursor flashes on the second digit.
14. Use the middle buttons ▲ , ▼ to set the desired digit.
15. Press the right button ➡.
16. Use the left button ⇦ to leave the "Hold-open time" parameter.
17. The safety prompt "Save changes?" appears.
    - If the changes are to be saved, press the right button ✔. The new hold-open time is activated.
    - If the changes are not to be saved, press the left button ✖. The previous hold-open time remains active.
18. The "Delays" menu is displayed.
19. Press the left button ⇦ repeatedly until the operating view is displayed again.

10.7 Select programme mode

8 programme modes and the service mode are available for the MHTM™ MicroDrive barriers.

Programme modes 1 to 4 are manual modes. In the manual modes, the barrier must be closed manually after a drive through.

Programme modes 5 to 8 are manual modes. In the automatic modes, the barrier closes again automatically after a vehicle drives through.

Programme	Description
1	Maintained contact
2	Deadman
3	Pulse control (bistable)
4	Two-Pulse control (Open/Closed button) (Factory setting)
5	Automatic (5): with hold-open time
6	Automatic (6): with hold-open time and decoupling of the opening loop at drive through in the opposite direction
7	Automatic (7): without hold-open time
8	Automatic (8) without hold-open time and decoupling of the opening loop at drive through in the opposite direction
🔧	Service

Table 34: Programme modes

Another programme mode can be selected pursuant to chapter 10.5, page 108.

NOTE!

For reasons of safety, the first barrier boom motion after programme mode change is performed at slow speed.

10.7.1 Mode 1: Maintained contact

Typical application

This mode is suitable for barriers that are integrated in a super-ordinated system like a plant, e.g. to control access to machines. In this mode, the barrier must be operated by an operator.

Function

The barrier is controlled only by one switch.

When the switch is closed, the barrier closes. When the switch is opened, the barrier opens.

Supported input functions

Input function	Signal type	Supported/ Not supported
Open low priority	–	Not supported
Open low priority with vend count	–	Not supported
Open high priority (priority 1)	Impulse signal	Supported
Opening loop	–	Not supported
Close (priority 2)	Permanent signal	Supported

Table 35: Supported input functions "Maintained contact"

→ See page 95, chapter 9.4.6 "Digital inputs".

10.7.2 Mode 2: Deadman

Typical application

This mode is suitable for barriers on parking places, factory premises, etc. The barrier must be operated by a porter.

Function

The barrier is operated by two buttons.

For opening the barrier, the button "open" must be pressed until the barrier is open all the way. For closing the barrier the button "close" must be pressed until the barrier is closed.

If no button is pressed, the barrier stops. If the "close" button is then pressed, the barrier opens completely first for safety reasons and closes then.

If the closing process is interrupted, only opening will be possible. A signal at the "Close" input would in this case open the barrier. If the "Close" signal is removed, the opening process is interrupted. If there is an impulse at the "Open high priority" input, the barrier opens completely.

Supported input functions

Input function	Signal type	Supported/ Not supported
Open low priority (priority 3)	Permanent signal	Supported
Open low priority with vend count	–	Not supported
Open high priority (priority 1)	Impulse or permanent signal	Supported
Opening loop	–	Not supported
Close (priority 2)	Permanent signal	Supported

Table 36: Supported input functions "Deadman"

→ See page 95, chapter 9.4.6 "Digital inputs".

10.7.3 Mode 3: Pulse control (bistable)

Typical application

This mode is suitable for barriers on factory premises, etc. that are little frequented by vehicles. The signal generator may be, e.g. a wireless button. The barrier must be operated by a person.

Function

The barrier is opened and closed by one command unit (pulse repetition). Every impulse changes the barrier's movement direction. The impulse must be present between 100 and 300 ms.

- 1. Signal: barrier opens
- 2. Signal: barrier closes
- 3. Signal: barrier opens

etc.

If another impulse is given during closing, the barrier opens. If another impulse is given during opening, the barrier opens completely and closes afterwards for reasons of safety.

Supported input functions

Input function	Signal type	Supported/ Not supported
Open low priority (opening and closing alternatingly), (priority 2)	Permanent signal	Supported
Open low priority with vend count	–	Not supported
Open high priority (priority 1)	Impulse or permanent signal	Supported
Opening loop	–	Not supported
Close	–	Not supported

Table 37: Supported input functions "Pulse control"

→ See page 95, chapter 9.4.6 "Digital inputs".

10.7.4 Mode 4: Two-pulse control

Typical application

This mode is suitable for barriers on factory premises, etc. that are often frequented by vehicles. The barrier must be operated by a person.

Function

The barrier is opened and closed completely via two separate command units (signal). One impulse on the respective input is sufficient for opening or closing. The impulse must be present between 100 and 300 ms.

The input function "Open high priority" is superordinated to the input function "Close". This means that while a closing signal is applied, the barrier can be opened by the signal "Open high priority". When the opening signal is removed, the barrier closes again at once after opening completely.

Supported input functions

Input function	Signal type	Supported/ Not supported
Open low priority	Impulse or permanent signal	Supported
Open low priority with vend count	Impulse signal	Supported
Open high priority	Impulse or permanent signal	Supported
Opening loop	–	Not supported
Close	Impulse or permanent signal	Supported

Table 38: Supported input functions "Two-Pulse control"

→ See page 95, chapter 9.4.6 "Digital inputs".

10.7.5 Automatic Modes 5 to 8: Drive direction 1 – overview and differences

The automatic modes differ in their functions in drive direction 1 "Safety loop → Opening loop".

In drive direction 2 "Opening loop → Safety loop", the automatic modes are identical. → See page 119, chapter 10.7.6.

Drive direction 1: "Safety loop → Opening loop"

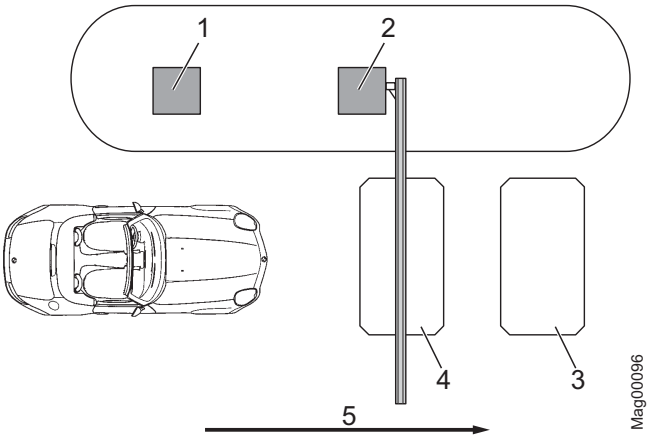

Fig. 48: Programme modes 5 to 8, Passage in direction 1

1 *Remote control, card reader, coin acceptor, etc.*
2 *Barrier*
3 *Opening loop*
4 *Safety loop*
5 *Passage in direction 1*

Programme mode	Hold-open time	Function Opening loop	Closing time drive backwards	Closing time without drive through
Automatic (5)	With hold-open time	The opening loop here acts as an extended safety loop.	If a vehicle drives onto the safety loop and leaves it again backwards, the barrier closes.	Barrier closes after the end of the opening time or at a closing signal.
Automatic (6)		The opening loop does not act as an extended safety loop here.		
Automatic (7)	Without hold-open time	The opening loop here acts as an extended safety loop.		Barrier closes after drive-through of the next vehicle or after the closing signal.
Automatic (8)		The opening loop does not act as an extended safety loop here.		

Table 39: Differences of automatic programme modes 5 to 8, direction 1

Parameterising control unit

Mode 5: Automatic (5)

Typical application

This mode is suitable for the automatic operation of a barrier, e.g. with card readers, remote control, coin acceptors and induction loops or light barriers. Passage of the barrier is possible in either direction.

Function

The barrier is opened from direction 1 "Safety loop → Opening loop" with an impulse at the "Open low priority" impulse, e.g. with a card reader or coin acceptor. The hold-open time that was set is also started.

When the vehicle leaves the safety loop, the hold-open time is deleted.

The barrier closes in the following cases:

- If the vehicle drives over both loops in direction 1, the barrier closes as soon as the vehicle leaves the opening loop. The opening loop here acts as an extended safety loop.
- If a vehicle drives onto the safety loop but leaves it again backwards, the barrier closes at once.
- If the vehicle drives over neither of the two loops, i.e. there is no drive through, the barrier closes after the end of the hold-open time.

→ For barriers with a safety light barrier but no safety loop installed, see page 134, chapter 10.10.10.

Mode 6: Automatic (6)

Typical application

This mode is suitable for the automatic operation of a barrier, e.g. with card readers, remote control, coin acceptors and induction loops or light barriers. Passage of the barrier is possible in either direction.

Function

The barrier is opened from direction 1 "Safety loop → Opening loop" with an impulse at the "Open low priority" impulse, e.g. with a card reader or coin acceptor. The hold-open time that was set is also started.

When the vehicle leaves the safety loop, the hold-open time is deleted.

The barrier closes in the following cases:

- If the vehicle drives over both loops in direction 1 "Safety loop → Opening loop", the barrier closes as soon as the vehicle leaves the safety loop. The opening loop here does not act as an extended safety loop.
- If a vehicle drives onto the safety loop but leaves it again backwards, the barrier closes.
- If the vehicle drives over neither of the two loops, i.e. there is no drive through, the barrier closes after the end of the hold-open time.

→ For barriers with a safety light barrier but no safety loop installed, see page 134, chapter 10.10.10.

Mode 7: Automatic (7)

Typical application

This mode is suitable for the automatic operation of a barrier, e.g. with ticket vending machines with internal logic. Passage of the barrier is possible in either direction.

Function

From direction 1 "Safety loop → Opening loop", the barrier is opened by an opening signal at one of the digital opening inputs. Hold-open time is not active in this mode.

The barrier closes in the following cases:

- If the vehicle drives over both loops in direction 1, the barrier closes as soon as the vehicle leaves the opening loop. The opening loop here acts as an extended safety loop.
- If a vehicle drives onto the safety loop but leaves it again backwards, the barrier closes.
- If the vehicle does not drive onto any of the two loops, the barrier remains open until a vehicle drives through or a closing signal is given.

→ For barriers with a safety light barrier but no safety loop installed, see page 134, chapter 10.10.10.

Mode 8: Automatic (8)

Typical application

This mode is suitable for the automatic operation of a barrier, e.g. with ticket vending machines with internal logic. Passage of the barrier is possible in either direction.

Function

From direction 1 "Safety loop → Opening loop", the barrier is opened by an opening signal at one of the digital opening inputs. Hold-open time is not active in this mode.

The barrier closes in the following cases:

- If the vehicle drives over both loops in direction 1 "Safety loop → Opening loop", the barrier closes as soon as the vehicle leaves the safety loop. The opening loop here does not act as an extended safety loop.
- If a vehicle drives onto the safety loop but leaves it again backwards, the barrier closes.
- If the vehicle does not drive onto any of the two loops, the barrier remains open until a vehicle drives through or a closing signal is given.

→ For barriers with a safety light barrier but no safety loop installed, see page 134, chapter 10.10.10.

Modes 5 to 8: Automatic (5) to (8) – supported input functions

Input function	Signal type	Supported/ Not supported
Open low priority	Impulse or permanent signal	Supported
Open low priority with vend count	Impulse signal	Supported
Open high priority	Impulse or permanent signal	Supported
Opening loop	–	Supported
Close	Impulse or permanent signal	Supported

Table 40: Supported input functions "Automatic (5) to (8)"

→ See page 95, chapter 9.4.6 "Digital inputs".

10.7.6 Automatic Modes 5 to 8: Drive direction 2

In drive direction 2 "Opening loop → safety loop", the automatic modes are identical.

Closing barrier boom – maximum distance of the induction loops

WARNING!

WARNING!
Danger from closing boom!

A closing boom may cause severe or lethal injury to persons, bicyclers, cabriolet drivers and motorcycle drivers!

Therefore:

– The maximum distance between opening loop and safety loop must be not greater than max. 1 m. In direction 2 "Opening loop → Safety loop", the barrier closes as soon as the vehicle leaves the opening loop. This means, if the distance is too large, the barrier closes before the car has cleared the barrier. → See page 47, chapter 7.

Drive direction 2: "Opening loop → Safety loop"

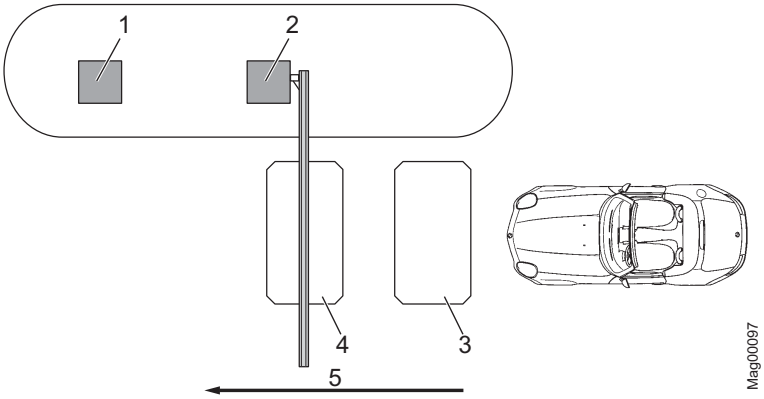

Fig. 49: Programme modes 5 to 8, Passage in direction 2

1 Remote control, card reader, coin acceptor, etc.
2 Barrier
3 Opening loop
4 Safety loop
5 Passage in direction 2

In direction 2, the opening loop is driven on first. The barrier opens. While the opening loop or safety loop is occupied, the barrier remains open. When the vehicle has left both loops, the barrier closes.

Hold-open time is not active in drive direction 2.

When the vehicle leaves the opening loop backwards, the barrier closes at once.

10.7.7 Mode "Service"

In the "Service" mode, all opening and closing signals are ignored. The functions of safety devices like the safety loop or safety light barrier remain active for security reasons. This means that as soon as, e.g., the safety loop is occupied, the barrier cannot be closed.

Switch on Mode "Service"

Switch the "Service" switch for the "Service" mode. The LED lights red. The display backlighting flashes.

Switch off Mode "Service"

After the service work, the switch "Service" must be switched. The LED must light green.

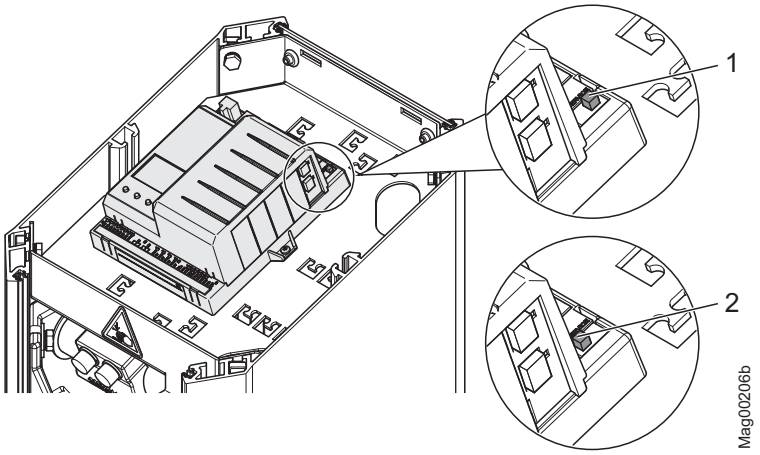

Fig. 50: Service switch

1 Mode "Service" on
2 Mode "Service" off

Button function

In the "Service" mode, you can control the motor with the two middle control buttons.

- Middle left button : Manually open the barrier.
- Middle right button : Manually close the barrier.

NOTE!

For reasons of safety, the first barrier boom motion after programme mode change is performed at slow speed.

10.8 Menu "Information" (i)

Call and navigate

1. The operating view is displayed. → See page 104, Fig. 46.
2. Press left control button i.
3. Use the left control button i to scroll within the menu.
4. The "Information" menu is can be left as follows:
   - Press the left control button i repeatedly until the operating view is displayed again or
   - Press right control button control button.

Operating view → Information	
Parameters	**Description**
Error messages	Shows the currently pending errors. If no error messages are present, the menu is not displayed.
Inputs	Displays the current settings for the digital inputs IN1 to IN8
Outputs	Displays the current settings for the digital outputs DO1 to DO4 and the relay outputs NO1 to NO3 and NO/NC4 to NO/NC6.
Induction loops Detector (A-B), Detector (C-D)	Displays the current frequencies of the connected induction loops. The first plug-in module is displayed as "Detector (A-B)". The second plug-in module is displayed as "Detector (C-D)". The frequencies of induction loops A and B are displayed directly. To display the frequencies for the induction loops C and D, you have to press the button . Use the button you can switch the view between "Detector (A-B)" and "Detector (C-D)". → See page 141, chapter 10.15 "Menu detector 1 (A-B)".

Table 41: Menu "Information"

10.9 Programme mode

→ See page 110, chapter 10.7.

10.10 Menu "Setup"

10.10.1 Barrier speed

Operating view → Main menu → Settings → Barrier speed	
Parameters	**Description**
Closing	Select the closing speed for the barrier boom. The closing speed can be changed for all barrier types. The option "fast" corresponds to the barrier-specific speed (100 %). **Options** ■ slow: approx. 50 % of the maximum speed ■ medium: approx. 70 % of the maximum speed ■ fast: maximum speed (barrier-specific speed) **Factory setting** ■ fast
Open	Select the opening speed for the barrier boom. The option "fast" corresponds to the barrier-specific speed (100 %). The parameter is displayed for the following boom types: Access Pro, Access Pro L, Access Pro H, Access Select and Access Select L, Parking Pro and Parking Select. **Options** ■ slow: approx. 50 % of the maximum speed ■ medium: approx. 70 % of the maximum speed ■ fast: maximum speed (barrier-specific speed) **Factory setting** ■ fast

Table 42: Menu "Barrier speed"

10.10.2 Delays

Operating view → Main menu → Setup → Delays	
Parameters	**Description**
Hold-open time	The parameter "Hold-open time" sets the hold-open time for the automatic programme modes 5 and 6. The hold-open time is started by an opening impulse by a control unit, such as a card reader. A passage should occur during the set hold-open time. If no passage occurs during the hold-open time, the barrier closes automatically. When the vehicle drives on the safety loop, the hold-open time is deleted. **Setting range** ■ 3 to 60 s **Factory setting** ■ 30 s

Operating view → Main menu → Setup → Delays	
Parameters	**Description**
Close delay	The barrier only closes if the set time for the closing delay is over. The timer for closing delay is started with the closing signal. With this parameter, you can also set the "Lead time" in the "Signal light" menu. **Setting range** ■ 0 to 15 s **Factory setting** ■ 0 s
Light barrier delay	The barrier only closes if the set time for the light barrier delay is over. The timer for light barrier delay is started with clearance of the light barrier. **Setting range** ■ 0 to 15 s **Factory setting** ■ 5 s
Impact delay	After the control unit has recognised that, e.g., a vehicle roof was hit by the closing barrier boom, the control unit tries to close the barrier again after the set impact delay. Impact is possible if, e.g., a user tries to drive through the barrier without permission. The following conditions must be met for the barrier to close after the end of the impact delay: ■ In the "Impact Settings" menu, the parameter "Automatic closing" must be set to "Automatic". ■ The safety devices, such as safety loop or safety light barrier, must be clear. → Also see page 128, chapter 10.10.7, menu "Impact settings". **Setting range** ■ 5 to 30 s **Factory setting** ■ 5 s

Table 43: Menu "Delays"

10.10.3 Cut off angle

Operating view → Main menu → Setup → Cut off angle	
Parameters	**Description**
Safety loop close	This parameter serves to ensure that a closed barrier can not be opened without authorisation. Where the barrier boom is below the set angle for "Safety loop close" during closing, signals of safety facilities like the safety loop or safety light barrier are ignored. I.e., the barrier closes completely below the angle set here. **Setting range** ■ Access: 1…40° ■ Parking and Toll: 1…80° **Factory setting** ■ 10°
Light barrier	Where the barrier boom is below the set angle for "Light barrier" during closing, the light barrier is ignored. I.e., the barrier closes completely below the angle set here even if the light barrier is covered. **Setting range** ■ 1 to 40° **Factory setting** ■ 10°
Impact detection	Where the barrier boom is below the set angle for impact detection during closing, impact detection is deactivated. I.e., the barrier closes completely below the angle set here. **Setting range** ■ 1 to 40° **Factory setting** ■ 10°

Table 44: Menu "Cut off angle"

10.10.4 Inputs

→ See page 95, chapter 9.4.6.

10.10.5 Outputs

→ See page 97, chapter 9.4.7.

10.10.6 Vend count

Operating view → Main menu → Setup → Vend count	
Parameters	**Description**
Reset behaviour	Use this parameter to set vend count reset behaviour. The function "Vend count" is available for programme modes 4 to 8. An internal vend count counts the impulses present at the input with the "Opening with vend count" function. The pulses are decremented only in driving direction 1 "Safety loop → Opening loop". **Options** ■ no counter reset (without vend count reset) ■ Time-out The vend count is set to the value "0" if the vehicle does not pass the supervision device within the set hold-open time. ■ Reset on closing The vend count is set to value "0" when a closing signal is given. ■ Time-out/Reset on closing The vend count is set to the value "0" if the event "Time-out" or the event "Reset on closing" occurs. **Factory setting** ■ Time-out/Reset on closing
Counter	This parameter shows the current counter reading of the vend count.

Table 45: Menu "Vend count"

Example vend count with programme mode "Automatic mode (5)"

This mode is suitable for the automatic operation of a barrier, e.g. with card readers, remote control, coin acceptors and induction loops or light barriers. The control units and the barrier have a larger distance from each other. Instead of a hold-open time, an internal vend count is incremented and decremented. Passage of the barrier is possible in either direction.

Parameterising control unit

Drive direction 1: "Safety loop → Opening loop"

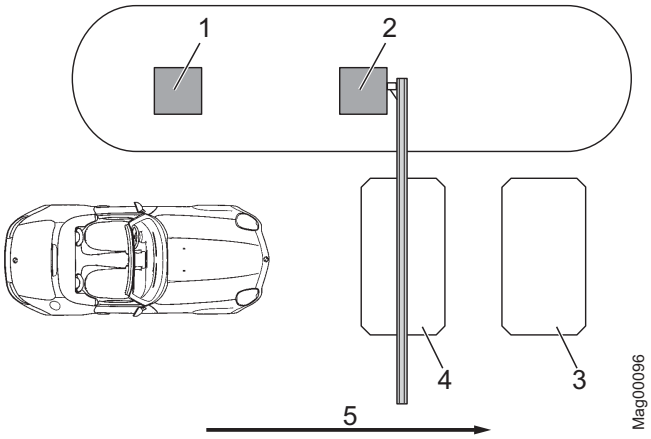

Fig. 51: Programme mode 5 with vend count, Passage in direction 1

1 Remote control, card reader, coin acceptor, etc.
2 Barrier
3 Opening loop
4 Safety loop
5 Passage in direction 1

The barrier is opened from direction 1 "Safety loop → Opening loop" with an impulse at the "Opening with vend count" impulse, e.g. with a card reader or coin acceptor. At the same time, an internal vend count is incremented.

After passage of the safety loop and the opening loop, the vend count is decremented again. When the internal vend count reaches the value "0, the barrier is closed.

Additionally, the vend count is set to the value "0" and the barrier closed in the following cases, depending on the settings for the "Vend count" parameter:

- The vehicle does not drive over the supervision facility within the set hold-open time.
- A closing signal is assigned.

The barrier closes in the following cases:

- If the vehicle drives over both loops in direction 1, the barrier closes as soon as the vehicle leaves the opening loop. The opening loop here acts as an extended safety loop.
- If a vehicle drives onto the safety loop but leaves it again backwards, the hold-open time is deleted and the barrier closes.
- If the vehicle drives over neither of the two loops, i.e. there is no drive through, the barrier closes depending on setting of the "vend count" parameter.

Drive direction 2: "Opening loop → Safety loop"

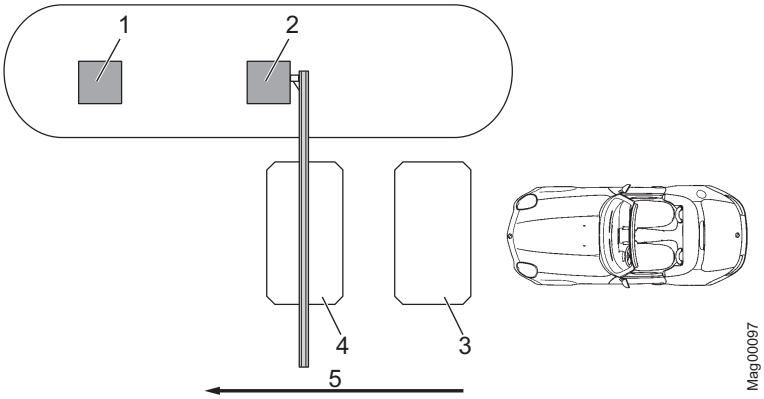

Fig. 52: Programme mode 5 with impulse storage, Passage in direction 2

1 Remote control, card reader, coin acceptor, etc.
2 Barrier
3 Opening loop
4 Safety loop
5 Passage in direction 2

In direction 2, the opening loop is driven on first. The barrier opens. While the opening loop or safety loop is occupied, the barrier remains open. When the vehicle has left both loops will the barrier close.

From drive direction 2, vend count is not active.

When the vehicle leaves the opening loop backwards, the barrier closes at one.

10.10.7 Impact settings

Operating view → Main menu → Setup → Impact settings	
Parameters	**Description**
Impact response	Select the barrier boom's impact reaction if the control unit detects an impact. → Also see page 124, chapter 10.10.3, parameter "Impact detection". **Options** ■ Open After impact detection, the barrier boom is opened completely. ■ Stop After impact detection, the barrier boom's closing movement is stopped. ■ Safe stop After impact detection, the barrier boom's closing movement is first stopped and then slightly opened. **Factory setting** ■ Open
Impact delay	After the control unit has recognised that, e.g., a vehicle roof was hit by the closing barrier boom, the control unit tries to close the barrier again after the set impact delay. Impact is possible if, e.g., a user tries to drive through the barrier without permission. The following conditions must be met for the barrier to close after the end of the impact delay: ■ In the " Automatic closing " parameter, the option must be set to "Automatic". ■ The safety devices, such as safety loop or safety light barrier, must be clear. This parameter corresponds to the parameter "Impact delay" in the "Delays" menu. **Setting range** ■ 5 to 30 s **Factory setting** ■ 5 s
Automatic closing	Select signal for closing of the barrier boom after impact detection. **Options** ■ Automatic The barrier boom automatically closes after the end of the impact delay. ■ Signal For the barrier boom to close, a signal must be applied to the input with the function "Close" or "Close low priority". **Factory setting** ■ Signal

Table 46: Menu "Impact settings"

10.10.8 Start-up behaviour

Use this menu to select the start-up behaviour of the barrier according to the following events:

- after switching on voltage supply
- after return of voltage
- after reset

You can select between 7 options: The default setting is option "1".

NOTE!

The display messages "Waiting for passage" and "Waiting for release" can be confirmed with the left button of the control unit. Ensure that no persons or vehicles are present below the barrier boom. In operating modes 3 to 8, the barrier will close as soon as the message has been confirmed. In operating modes 1 and 2, a closing signal is still required after the message is confirmed.

Operating view → Main menu → Settings → Start-up behaviour	
Option	**Description**
1	**Reference run** In this option, the barrier initially performs a reference run. This means that the barrier opens completely at low speed. **Release signal** No release signal is required to close the boom. **Closing behaviour** ■ Programme modes 1 or 2: If a safety loop is installed, the barrier closes only after a vehicle has passed through and a permanent closing signal is pending. If only a safety light barrier is installed, no passage is required. The barrier closes at once when a permanent closing signal is applied. ■ Programme modes 3 to 8: If a safety loop is installed, the barrier closes when the first vehicle has driven through. If only a safety light barrier is installed, the barrier closes at once when the voltage returns.

Parameterising control unit

Operating view → Main menu → Settings → Start-up behaviour	
Option	**Description**
2	**Reference run** In this option, the barrier initially performs a reference run. This means that the barrier opens completely at low speed. **Release signal** A release signal must be applied for the barrier to be ready fro closing. The release signal can be applied even before the voltage returns. The release signal can be given by an external closing signal or by pushing the left operating button at the control unit. **Closing behaviour** ■ Programme modes 1 or 2: If a safety loop is installed, the barrier closes only after a vehicle has passed through and a permanent closing signal is pending. If only a safety light barrier is installed, no passage is required. The barrier closes at once when a permanent closing signal is applied. ■ Programme modes 3 to 8: If a safety loop is installed, the barrier closes when the first vehicle has driven through. If only a safety light barrier is installed, the barrier closes at once when the voltage returns.
3	**Reference run** In this option, the barrier initially performs a reference run. This means that the barrier opens completely at low speed. **Release signal** A release signal must be applied for the barrier to be ready fro closing. If the release signal is applied before return of voltage, the release signal is ineffective. In this case, the release signal must be revoked and applied again after the barrier opens. The release signal can be given by an external closing signal or by pushing the left operating button at the control unit. **Closing behaviour** ■ Programme modes 1 or 2: If a safety loop is installed, the barrier closes only after a vehicle has passed through and a permanent closing signal is pending. If only a safety light barrier is installed, no passage is required. The barrier closes at once when a permanent closing signal is applied. ■ Programme modes 3 to 8: If a safety loop is installed, the barrier closes only after the first vehicle has driven through. If only a safety light barrier is installed, the barrier closes at once when the voltage returns.

Parameterising control unit

Operating view → Main menu → Settings → Start-up behaviour	
Option	**Description**
4	**Reference run** In this option, the barrier boom stops initially. The barrier will only carry out a reference run after a release signal. **Release signal** For A release signal must be applied for the barrier to carry out a reference run. If the release signal is applied before return of voltage, the release signal is in-effective. In this case, the release signal must be revoked and applied again after the barrier opens. The release signal can be given by an external closing signal or by pushing the left operating button at the control unit. **Closing behaviour** ■ Programme modes 1 or 2: If a safety loop is installed, the barrier closes only after a vehicle has passed through and a permanent closing signal is pending. If only a safety light barrier is installed, no passage is required. The barrier closes at once when a permanent closing signal is applied. ■ Programme modes 3 to 8: If a safety loop is installed, the barrier closes only after the first vehicle has driven through. If only a safety light barrier is installed, the barrier closes at once when the voltage returns.
5	**Reference run** In this option, the barrier boom stops initially. The barrier will only carry out a reference run after a release signal. **Release signal** For A release signal must be applied for the barrier to carry out a reference run. The release signal can be applied even before the voltage returns. The release signal can be given by an external closing signal or by pushing the left operating button at the control unit. **Closing behaviour** ■ Programme modes 1 or 2: If a safety loop is installed, the barrier closes only after a vehicle has passed through and a permanent closing signal is pending. If only a safety light barrier is installed, no passage is required. The barrier closes at once when a permanent closing signal is applied. ■ Programme modes 3 to 8: If a safety loop is installed, the barrier closes only after the first vehicle has driven through. If only a safety light barrier is installed, the barrier closes at once when the voltage returns.

Parameterising control unit

Operating view → Main menu → Settings → Start-up behaviour	
Option	**Description**
6	**Reference run** In this option, the barrier boom stops initially. **Release signal** The barrier carries out a reference run after the left operating button on the control unit is pressed. **Closing behaviour** ■ Programme modes 1 or 2: The barrier closes at once when a permanent closing signal is applied. ■ Programme modes 3 to 8: The barrier closes at once after the barrier reference run.
7	**Reference run** In this option, the barrier initially performs a reference run. This means that the barrier opens at low speed. **Release signal** No release signal is required to close the boom. **Closing behaviour** ■ Programme modes 1 or 2: The barrier closes at once when a permanent closing signal is applied. ■ Programme modes 3 to 8: If a safety loop is installed, the barrier closes only after the first vehicle has driven through or after closing. If only a safety light barrier is installed, the barrier closes at once when the voltage returns. **WARNING!** **Danger of injury from closing boom!** ■ Visual contact to the barrier is required when the closing signal is given. ■ No vehicles and persons must stand below the barrier when the closing signal is given.

Table 47: Menu "Start-up behaviour"

10.10.9 Power failure

Operating View → Main Menu → Settings → Power failure	
Parameters	**Description**
Power failure	This parameter sets whether the barrier boom opens at power outage or opens or closes depending on the barrier boom position. The balancing springs must be set according to the selected option. → See page 80, chapter 8.13. **Options** ■ Unlocked With this option, the lever system of the closed barrier is unlocked; the barrier remains closed. The boom can be opened manually. If the boom angle is less than approx. 30°, the boom will close. If the barrier boom is above an angle of approx. 35°, the barrier boom opens. The balancing springs in the lever system must be set accordingly. ■ Open In this option, the barrier boom opens at power outage. The barrier boom is moved to the locked end position with the present residual energy of the mains unit and completely opened by the balancer springs of the lever system. The balancer springs must be set correctly and the barrier boom must not be kept in the closed position by external influence. If the power fails during closing, the barrier boom may reach the closed position and lock under certain circumstances. The residual mains adapter power is not sufficient to open the barrier again. ■ Locked For this option, the barrier boom behaviour depends on the barrier boom position at power outage. When the barrier is closed, it remains closed and the lever system remains locked. Manual opening of the barrier is not possible or requires considerable application of force. If the barrier boom is below an angle of approx. 30°, the barrier boom closes. If the barrier boom is above an angle of approx. 35°, the barrier boom opens. The balancing springs in the lever system must be set accordingly. **Factory setting** ■ Unlocked

Table 48: Menu "Power failure"

10.10.10 Closure by light barrier

Operating view → Main menu → Settings → Closure by light barrier	
Parameters	**Description**
Closure by light barrier	Use this parameter to select the closing behaviour for barriers with only one safety light barrier installed. If a safety loop is installed, the barrier closes only after the first vehicle has driven through in the automatic programme modes 5 to 8. If only a safety light barrier is installed, the barrier will not close automatically after the first vehicle has driven through in the automatic programme modes 5 to 8. **Options** ■ inactive In programme modes 5 and 6, the barrier only closes if either a closing signal is applied or the hold-open time has passed. In programme modes 7 and 8, the barrier only closes when a closing signal is applied. ■ active In programme modes 5 to 8, the barrier closes at once when a vehicle drives through the safety light barrier. **Factory setting** ■ inactive

Table 49: Menu "Closure by light barrier"

10.10.11 Master/Slave

Operating view → Main Menu → Settings → Master/Slave	
Parameters	**Description**
Master/Slave	Activate and deactivate "Parallel operation" function. By activating the master/slave function, the corresponding in- and outputs are automatically converted. → For information on parallel operation, see separate instructions. **Options** ■ inactive ■ active **Factory setting** ■ inactive

Table 50: Menu “Master/Slave”

10.10.12 Menu "Language"

Operating view → Main menu → Setup → Language	
Parameters	**Description**
Language	Select menu language **Options** ■ German ■ English ■ French ■ Spanish ■ Italian ■ Portuguese

Table 51: Menu "Language"

10.11 Menu "Attachments"

10.11.1 Signal light

The parameters "Signal mode A", "Signal mode B" and "Signal mode C" can be used to parameterise the function for the outputs "Signal light A", "Signal light B" and "Signal light C".
→ See page 97, Table 28.

You can connect three signal lights.

If you want to control light strips via the MHTMTM MicroDrive barriers.control unit, you need to select the "Illumination strip red" option for "Signal Mode A" and "Illumination strip green" for

Operating view → Main menu → Attachments → Signal light	
Parameters	**Description**

Signal mode A (continued on next page)	Select function for output "Signal light A".
	The parameter "lead time" can be used to parameterise the warning lamp so that it already lights up red or flashes before closing. The lead time is the time between the closing signal and commencement of the closing procedure.
	Options
	■ Traffic light (permanent signal for red/green signal lights):
	  ■ Barrier closed: Traffic light red
	  ■ Barrier opens: Traffic light red
	  ■ Barrier open (upper end position): Traffic light off
	  ■ Barrier closes (without lead time)/ closing time (with lead time): Traffic light red

Parameterising control unit

Operating view → Main menu → Attachments → Signal light	
Parameters	**Description**
Signal mode A (continued)	■ Warning signal (connection of a visual or acoustic signal/ permanent signal before and during closing of the barrier): ■ Barrier closed: Warning signal off ■ Barrier opens: Warning signal off ■ Barrier open (upper end position): Warning signal off ■ Barrier closes (without lead time)/ closing time (with lead time): Warning signal red ■ Flashing light (flashing light connection/ flashing signal while the barrier opens or closes): ■ Barrier closed: Flashing light off ■ Barrier opens: Flashing light flashes at 2 Hz ■ Barrier open (upper end position): Flashing light off ■ Barrier closes (without lead time)/ closing time (with lead time): Flashing light flashes at 2 Hz ■ Boom illumination (boom illumination connection/ permanent flashing signal except when the barrier is open): ■ Barrier closed: Illumination flashes at 2 Hz ■ Barrier opens: Illumination flashes at 2 Hz ■ Barrier open (upper end position): Illumination off ■ Barrier closes (without lead time)/ closing time (with lead time): Illumination flashes at 2 Hz ■ Illumination strip red ■ Barrier closed (lower end position): Red, permanent light ■ Barrier opens: Red flashes at 2 Hz ■ Barrier open (upper end position): Red off ■ Barrier closes (without lead time)/ closing time (with lead time): Red flashes at 2 Hz **Factory setting** ■ Illumination strip red
Signal mode B	Select function for output "Signal light B". **Options** → For the options "Traffic light", "Warning signal", "Flashing lights", "Boom illumination", see parameters "signal mode A". ■ Illumination strip green ■ Barrier closed (lower end position): Green off ■ Barrier opens: Green off ■ Barrier open (upper end position): Green, permanent light ■ Barrier closes (without lead time)/ closing time (with lead time): Green off **Factory setting** ■ Illumination strip green

Operating view → Main menu → Attachments → Signal light	
Parameters	**Description**
Signal mode C	Select function for output "Signal light C". **Options** ■ Traffic light (permanent signal for red/green signal lights): ■ Barrier closed: Traffic light red ■ Barrier opens: Traffic light red ■ Barrier open (upper end position): Traffic light off ■ Barrier closes (without lead time)/ closing time (with lead time): Traffic light red ■ Warning signal (connection of a visual or acoustic signal/ permanent signal before and during closing of the barrier): ■ Barrier closed: Warning signal off ■ Barrier opens: Warning signal off ■ Barrier open (upper end position): Warning signal off ■ Barrier closes (without lead time)/ closing time (with lead time): Warning signal red **Factory setting** ■ Warning signal
Lead time	In some application cases, it is required for reasons of safety that a warning signal for the following traffic lights up after before closing of the barrier. This warning signal must light up before the barrier closes. The warning signal is switched on with the closing signal and the lead time is started. The barrier closes only after the end of the set lead time With this parameter, you can also set the "Close delay" in the "Delays" menu. **Setting range** ■ 0 to 15 s **Factory setting** ■ 0 s
Start event	Select the start event from when on the signal lights should switch. **Options** ■ Closing signal ■ Safety loop active The option "Safety loop active" is only sensible for the automatic programme modes 5 to 8. If an opening signal is pending, the signal lamps are not switched. **Factory setting** ■ Closing signal

Table 52: Menu "Signal light"

10.11.2 Boom contact settings

The barrier can optionally be equipped with a boom contact in the flange. In the "Toll" series, the boom contact is integrated by default and performed as a "Swing Away" or "Auto Swing Away".

Operating view → Main menu → Attachments → Boom contact settings	
Parameters	**Description**
inactive/active	The barrier can optionally be equipped with a boom contact in the flange. The function "Boom contact settings" is used to select the behaviour of the input function "Boom contact input" and the output function "Boom contact FB". The functions must be selected. → See page 95, chapter 9.4.6 and page 97, chapter 9.4.7. **Options** ■ inactive The "Boom contact" is inactive. If the output function "Boom contact FB" was selected, this output is deactivated once the boom contact triggers. The input "Boom contact input" has no function in this option. ■ active The "Boom contact" is active. If "Boom contact FB" was selected for the output function, this output is deactivated once the boom contact triggers. If "Boom contact input" was selected for the input function, 24 V DC are pending at the input while the boom is resting in the flange. If the barrier boom is moved from its position, the +24 V DC are removed from the "Boom contact" input. The barrier moves into the "open" position. **Factory setting** ■ Inactive
Automatic closing	Select signal for closing of the barrier boom after boom release. **Options** ■ Automatic The barrier boom automatically closes after the end of the delay time. ■ Signal For the barrier boom to close, a signal must be applied to the input with the function "Close" or "Close low priority". **Factory setting** ■ Automatic

Operating view → Main menu → Attachments → Boom contact settings	
Parameters	**Description**
Closing delay	The parameters are only relevant in the following cases: ■ The barrier is a "Swing Away" or "Auto Swing Away" design. ■ In the "Close autom." parameter, the option is set to "Automatic". If a car drives against a "Swing Away" barrier boom, it snaps from the flange. In the "Swing Away" version, the barrier boom must be returned to the flange manually. In the "Auto Swing Away" version, the barrier boom automatically moves into the "open" position. When the position is reached, the barrier boom is locked in the flange by springs. After the barrier boom has caught again, the barrier closes after the time set here. **Setting range** ■ 0 to 10 s **Factory setting** ■ 10 s

Table 53: Menu "Boom contact settings"

10.11.3 Boom locking

The barrier can optionally be equipped with an electro-mechanical boom lock at the end of the barrier boom. When the barrier is closed, the boom locking is activated via the output function "boom locking". If a signal is present for opening, the boom lock is removed first. → See also page 97, digital output function "Boom locking".

Operating view → Main menu → Attachments → Boom locking	
Parameters	**Description**
Without boom locking	Boom locking not present
With boom locking	Boom locking present

Table 54: Menu "Boom locking"

10.12 Menu "Service"

This menu is only intended for MAGNETIC's service and only accessible with a password.

10.13 Menu "Information"

Operating view → Main menu → Information	
Parameters	**Description**
Serial No.	Displays the serial number of the control unit
Hardware Version	Displays the present hardware version
Software #	Display of the present software number
SW Version	Displays the present software version
Temperature	Displays the current temperature in the control unit

Table 55: Menu "Information"

10.14 Menu "Motor GW (Gateway)

Operating View → Main Menu → Motor GW (Gateway)	
Parameters	**Description**
Software #	Displays the present software number
SW version	Displays the present software version
Motor temperature	Display of the current motor temperature
Motor-SW	Display of the present motor software

Table 56: Menu "Motor GW (Gateway)"

10.15 Menu "Detector 1 (A-B)"

This menu is used to reference the induction loops A and B.

Operating view → Main menu → Detector 1 (A-B)	
Parameters	**Description**
Recalibration	Start reference of the induction loops (activate)
Mode A	Select position and function of loop A. **Options** ■ Inactive Induction loop is not present or not relevant for evaluation. ■ Active The induction loop state is put on the output with function "Loop active". Internally, the induction loop condition is not used. ■ Safety loop The induction loop assumes the function of the safety loop. ■ Opening entry The induction loop assumes the function of the opening loop on the entry lane. ■ Open exit The induction loop assumes the function of the opening loop on the exit lane. ■ Presence entry The induction loop assumes the function of the presence loop on the entry lane. ■ Presence exit The induction loop assumes the function of the presence loop on the exit lane.
Mode B	Select position and function of loop B. → For description, see parameter "Mode A".
Sensitivity A	Set the response sensitivity of the induction loop A. The response sensitivity is divided into increments. **Factory setting** ■ 5 **Setting range** ■ 0…9
Sensitivity B	Set the response sensitivity of the induction loop B. → For description, see parameter "Sensitivity A".
Frequency settings	→ See page 142, Table 58.
Information	Displays information via the plug-in module "Detector 1 (A–B). Here, the serial number (SerNo), hardware version, software # and software version and of the plug-in module are displayed.

Table 57: Menu "Detector 1 (A-B)"

Operating view → Main menu → Detector 1 (A-B) → Frequency settings	
Parameters	**Description**
Freq. A	Displays the currently measured frequency for induction loop A
Freq. B	Displays the currently measured frequency for induction loop B
Frequ. Shift	Interference influences, e.g. from external loop detectors or induction loops of barriers close by can influence the frequency of loops A and B. Use the parameter "Frequ. Shift" to change the frequency values for loops A (channel A) and B (channel B) by approx. 10 % and thus reduce the influence of loops A and B. **Options for channels A and B.** ■ High: high frequency value ■ Low: low frequency value
Ref value A	Displays the reference frequency for induction loop A
Ref value B	Displays the reference frequency for induction loop B

Table 58: Menu "Frequency settings"

10.15.1 Check the working frequency of the induction loops

1. The operating view is displayed. → See page 104, Fig. 46.
2. Press the left control button i repeatedly, until the menu "Detector 1 (A-B)" is displayed.

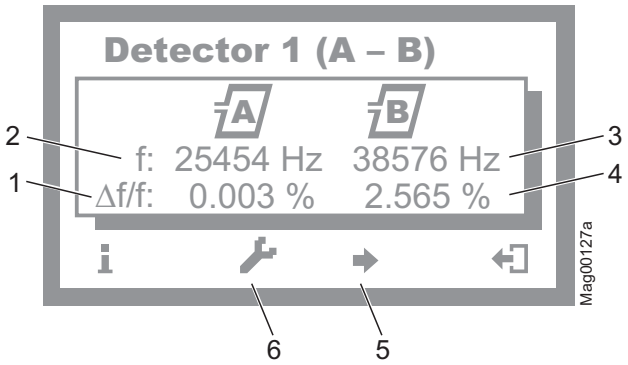

Fig. 53: Example "View – Menu Detector 1 (A-B)"

1 Relative frequency of induction loop A
2 Currently measured frequency of induction loop A
3 Currently measured frequency of induction loop B
4 Relative frequency of induction loop B
5 If another optional detector module is present: Switching between the two detector modules
6 Recalibration of the induction loop

3. Use the right button to leave the "Detector 1 (A-B)" menu. The operating view is displayed.

10.15.2 Reconciling and setting the operating frequency of the induction loop

Operating frequency requirements

The operating frequency must fulfil following requirements:

- When driving over the induction loop with a vehicle, a significant frequency increase must be measurable. Chose stage 5 or 6 for sensitivity. The relative frequency change (Δf/f) must be at least 0.1%. The higher the relative frequency increase, the higher the operating safety of the induction loop.
- The induction loops of a control unit operate alternating, and can therefore not affect each other.
  However, to avoid interferences by frequency coupling from external loop detectors or other control units in the direct proximity, a frequency clearance of at least 10000 Hz must be kept to them. For this, the menu "Frequ. Shift" is used to set the frequency option to "Low" or "High", or to deactivate or adjust the induction loop coil number.

Reference working frequency via the menu "Information" (i)

1. The operating view is displayed. → See page 104, Fig. 46.
2. Press left operating button i.
3. Press the left control button repeatedly, until the menu "Detector 1 (A-B)" is displayed. → See page 142, Fig. 53.
4. Press second operating button from the left.
5. The barrier is referenced. The loop symbols flash during reconciliation.
6. Check working frequencies. If required, perform settings like sensitivity, etc. in the menu "Detector 1 (A-B)" in the main menu.
7. Perform one of the following steps:
   - For a "Detector" plug-in module: Use the right button to leave the "Detector 1 (A-B)" menu. The operating view is displayed.
   - For two "Detector" plug-in modules: Press the third operating button from the left. The "Detector 2 (C-D)" menu is displayed.
8. The barrier is referenced. The loop symbols flash during reconciliation.
9. Check working frequencies. If required, perform settings like sensitivity, etc. in the menu "Detector 2 (C-D)" in the main menu.
10. Use the right button to leave the "Detector 2 (C-D)" menu. The operating view is displayed.

Parameterising control unit

Frequency value of the unassigned induction loop unstable

If the frequency value of an induction loop is unstable, this induction loop is influenced by an induction loop of another barrier or an external detector. The detector channels do not influence each other.

Depending on the loop geometry and settings of the external detector, set the menu "Frequ. Shift" to "Low" or "High".

1. The operating view is displayed. → See page 104, Fig. 46.
2. Press right operating button 🔧.
3. The "Main menu" menu is displayed.
4. Select the menu "Detector 1 (A-B)" with the two middle buttons ▲, ▼.
5. Confirm selection with the right control button ✔.
6. The "Detector 1 (A-B)" menu is displayed.
7. Select the menu "Frequency settings" with the two middle buttons ▲, ▼.
8. Confirm selection with the right control button ✔.
9. The "Frequency settings" menu is displayed.
10. Select the menu "Freq. Shift" with the two middle buttons ▲, ▼.
11. Confirm selection with the right control button ✔.
12. The "Frequ. Shift" menu is displayed.
13. Select the parameter "Channel A" or "Channel B" with the two middle buttons ▲, ▼.
14. Confirm selection with the right control button ✔.
15. The corresponding menu is displayed.
16. Select the option "Low" or "High" for the respective channel with the two middle buttons ▲, ▼.
17. Use the right button ✔ to select the option. Your selection is marked with the symbol ☑.
18. Use the left button ⇦ to leave the menu.
19. The safety prompt "Save changes?" appears.
    - If the changes are to be saved, press the right button ✔.
    - If the changes are not to be saved, press the left button ✘.
20. Press the left button ⇦ repeatedly until the operating view is displayed again.
21. Test the operating frequencies.

For another plug-in module, the menu "Detector 2 (C-D)" is displayed in the main menu. Reconciliation is performed for the induction loops A and B.

10.16 Menu "Detector 2 (C-D)"

This menu is displayed if a second plug-in module with the function "Detector" was plugged into the control unit. This menu is used to reference the induction loops C and D.

The menu "Detector 2 (C-D)" corresponds to the menu "Detector 1 (A-D)". → See page page 141, chapter 10.16.

10.17 Menu "Radio control FM"

The "Radio control FM" menu is displayed when the "Radio" plug-in module is plugged into one of the control unit slots.

The hand transmitters are available as 1 and 2-channel versions. With the 2-channel version, 2 barriers can be operated independently of each other with a hand transmitter.

If you want to operate the barrier via hand transmitter, manual programme mode 3 or one of the automated programme modes 5 to 8 must be selected.

The barrier is opened by pressing the button on the hand transmitter. The closing function depends on the selected programme mode. In automatic modes 5 to 8, the barrier is closed automatically. In programme mode 3, the barrier is closed by repeated pressing of the button on the hand transmitter. After pressing the button on the hand transmitter, the hand transmitter number is indicated in the display.

A radio module can manage up to 100 hand transmitters.

Operating view → Main menu → Radio control FM	
Parameters	**Description**
Number of transmitter (Number of transm.)	Display of number of hand transmitters with which the barrier can be opened
Teach in remote control	Use this parameter to pair a hand transmitter with the radio module.
Delete remote control	Use this parameter to revoke a pairing between a hand transmitter and the radio module. **Options** ■ With remote control Dissolve pairing by pressing a button on the hand transmitter. ■ With number Dissolve pairing by entering the hand transmitter number.
Information	Displays information via the plug-in module "Radio". Here, the hardware version, software version and serial number (SerNo) of the plug-in module are displayed.

Table 59: Menu "Radio control FM"

Parameterising control unit

Set hand transmitter code

The hand transmitter code is set via DIP switches in the hand transmitter. We recommend changing the DIP switches' standard settings.

1. Open hand transmitter housing. For this, press the coloured pressure point while pulling up the upper housing part at the same time.
2. Change and document the DIP switches' settings.
   In case of 2-channel hand transmitters, the DIP switches 11 and 12 must be in the ON position.

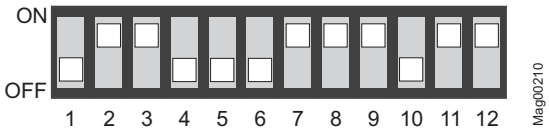

Fig. 54: Example DIP switches settings, DIP switch 11 and 12 only for 2-channel hand transmitter in ON position

3. Close housing.

Teach in remote control

1. The operating view is displayed. → See page 104, Fig. 46.
2. Press right operating button .
3. The "Main menu" menu is displayed.
4. Select the menu "Radio control" with the two middle buttons , .
5. Confirm selection with the right control button .
6. Select the parameter "Teach in remote control" with the two middle buttons , .
7. Confirm selection with the right control button .
8. The message "Press button" appears.
9. Press the button on the hand transmitter. For the 2-channel hand transmitter, the corresponding channel is paired with the radio module.
10. The message "Successful" appears on the display. The number for the parameter "Number of transmitter" is increased by one.
11. Press the left button repeatedly until the operating view is displayed again.

Parameterising control unit

Delete remote control

1. The operating view is displayed. → See page 104, Fig. 46.
2. Press right operating button 🔧.
3. The "Main menu" menu is displayed.
4. Select the menu "Radio control" with the two middle buttons ▲, ▼.
5. Confirm selection with the right control button ✔.
6. Select the parameter "delete remote control" with the two middle buttons ▲, ▼.
7. Confirm selection with the right control button ✔.
8. The options "with remote control" and "with number" are displayed.
9. Select an option with the two middle buttons ▲, ▼.
10. Confirm selection with the right control button ✔.

Option "With remote control"

The option "'With remote control" was selected

1. The message "press button" appears.
2. Press the button on the hand transmitter.
3. The message "Successful" appears. The number for the parameter "Number transmitter" is decreased by one.
4. Press the right button repeatedly until the operating view is displayed again.

Option "With number"

The option "with number" was selected

1. Enter hand transmitter number.
2. Use the left button to leave the menu.
3. The safety prompt "Save changes?" appears.
   - If the hand transmitter is to be deleted, press the right button ✔.
   - If the hand transmitter is not to be deleted, press the left button ✖.
4. The "Delete remote control" menu is displayed.
5. Press the left button repeatedly until the operating view is displayed again.

10.18 Factory settings

Reset parameters

This menu can be used to reset the parameters to factory settings.

1. The operating view is displayed. → See page 104, Fig. 46
2. Press right operating button .
3. The "Main menu" menu is displayed.
4. Select the menu "Factory Settings" with the two middle buttons , .
5. Confirm selection with the right control button .
6. Enter password "0 0 0 0".
7. Confirm password with the right control button .
8. The message "Reset to factory settings" appears.
9. Press right operating button .
10. The safety prompt "Save changes?" appears.
    - If the changes are to be saved, press the right button . The current settings are reset to factory settings. Restart is performed
    - If the changes are not to be saved, press the left button .
11. Press the left button repeatedly until the operating view is displayed again.

11 Start-up and operation

11.1 Safety

→ See also safety notes on page 19, chapter 2.6 "Occupational safety and special dangers".

General

⚠ WARNING!

WARNING!
Danger by inappropriate start-up and operation!

Inappropriate start-up and operation can cause severe or lethal injuries.

Therefore:

- Commissioning and operation must be performed by specialists or electrical specialists.
- Always observe the radius of action of the barrier boom.
- Prior to start of works ensure that all housing covers are correctly mounted.

Wind forces over 10 Beaufort

⚠ WARNING!

WARNING!
Risk of injury from breaking off barrier booms in case of high wind speeds!

In case of wind speeds exceeding 10 Beaufort, the barrier boom may break off from the wind load and cause severe injuries.

Therefore observe in case of storm warnings above 10 Beaufort:

- Disassemble barrier boom or secure it with suitable measures.
- Stop operating the barrier system.

Personal protective equipment

The following must be worn during start-up:

- Work clothes
- Protective gloves
- Safety shoes
- Protective helmet.

11.2 Commissioning

Check before to initial start-up

The following inspections must be performed prior to initial start-up:

- Check electrical connections.
- Check barrier boom position.
- Check balancing springs in the lever system and adjust if required.

Inspection during the first start-up

The following inspections must be performed prior to first start-up:

- Check programme mode. → See page 110, chapter 10.7.
- Check parameterisation in connection with wiring.
- Testing and setting the operating frequency of the induction loops. → See page 142, chapter 10.15.1.
- Check the function of the barrier, induction loops, and the signalling devices.

11.3 Switching on and off the barrier

NOTICE!

NOTICE!
A too early mains voltage power up after a shut down can result in damage of the equipment!

Therefore:

– Wait for at least 10 seconds after shutting off the mains voltage before you switch the mains voltage on again.

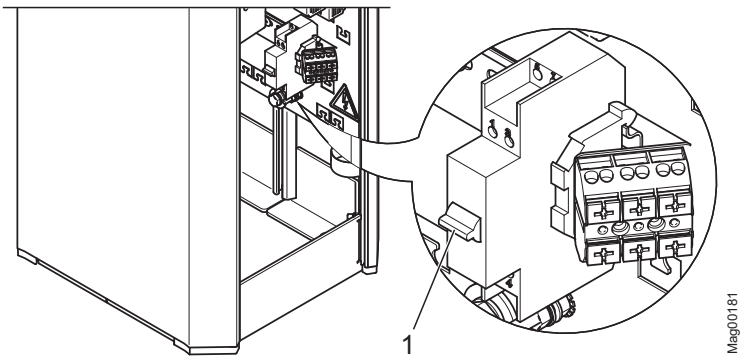

Fig. 55: Switching on and off barrier

1 2-pole mains switch

Switching on

1. Remove the barrier housing hood.
2. Remove the barrier housing door.
3. Switch on the barrier via the 2-pole mains switch.
4. Depending on the settings in the "Start-up behaviour" menu, the barrier boom slowly moves into the top end position (homing run) or stops.
5. Mount the door.
6. Attach and lock the hood.

Switching off

1. Remove the barrier housing hood.
2. Remove the barrier housing door.
3. Switch off the barrier via the 2-pole mains switch.
4. Depending on the settings of the lever system's balancing spring and the settings in the menu "power outage behaviour", the barrier boom opens or closes. → See page 80, chapter 8.13 and page 129, chapter 10.10.8.
5. Mount the door.
6. Attach and lock the hood.

11.4 Putting the barrier temporarily out of operation

High wind speeds

⚠ WARNING!

WARNING!
Risk of injury from barrier boom in case of high wind speeds!

The barrier boom is no longer securely locked with the mains voltage off. At high wind speeds, the barrier boom can be pressed from its end position. The moving barrier boom can severely injure a person.

Therefore:

– Keep supplying the barrier with mains voltage.
– Remove the barrier boom if necessary.

NOTICE!

NOTICE!
Possible damage to the equipment by condensed water when mains voltage is switched off!

Therefore:

– Keep supplying the barrier with mains voltage.

Start-up and operation

If the barrier is put out of operation for a longer period, proceed as follows:

1. Switch off barrier. → See page 150, chapter 11.3.
2. Remove the barrier boom if necessary. → See page 168, chapter 14.3.
3. Protect the barrier from corrosion and contamination.
4. Switch on barrier. → See page 150, chapter 11.3.

12 Maintenance

12.1 Safety

→ See also safety notes on page 19, chapter 2.6 "Occupational safety and special dangers".

General

⚠ WARNING!

WARNING!
Danger by inappropriate maintenance!

Inappropriate maintenance can cause severe or lethal injuries.

Therefore:

- All maintenance work must be performed by specialists or electrical specialists.
- Prior to work, ensure that there is sufficient assembly space.
- Pay attention to tidiness and cleanness at the assembly site! Loosely stacked or lying around components and tools are accident sources.
- After completion of maintenance work, ensure that all covers are correctly mounted.
- Wear protective helmet.

Personal protective equipment

The following must be worn during maintenance work:

- Work clothes
- Protective gloves
- Safety shoes
- Protective helmet.

12.2 Cleaning

The cleaning interval essentially depends on the environmental conditions and the climate.

Aggressive cleaning aids and substances

NOTICE!	
	NOTICE! **Unit damage possible!** Aggressive detergents and consumables may damage or destroy components, electric cables, or the coating of the barrier. Therefore: – Do not use cleaning agents with aggressive ingredients.

Carrying out cleaning work:

1. Switch off power supply and secure against restarting.

DANGER!

Mortal danger by electric voltage!

- Keep moisture and dust away from live parts. Moisture or dust may cause a short circuit.
- Never clean the barrier housing and barrier boom with vapour or pressure-jet cleaners.

2. Remove contamination from the outside of the barrier housing properly using water with washing-up liquid and a square of cloth. Do not bring control units and electrical components in contact with moisture.
3. Remove dust inside the housing with a vacuum cleaner.
4. After cleaning work, check that all previously opened covers are closed again and that all safety equipment functions correctly.

12.3 Maintenance schedule

The following describes the maintenance work that is necessary for optimal, trouble-free operation. Maintenance intervals must be observed.

If increased wear of individual components or functional groups is revealed during regular inspections, the operator must reduce the required maintenance intervals on the basis of the actual signs of wear.

In case of questions on maintenance work and intervals, contact your dealer. Procure spare parts from your dealer or directly from the manufacturer. For the address, see invoice, delivery note or the reverse of these instructions.

Interval	Maintenance work	To be carried out by
Monthly	Visual inspection of the housing, inside and out, for damage and corrosion. Clean the housing and repair paint damage as necessary. Remove corrosion damage.	Specialist
	Visual inspection of foundation anchors, U-profiles and mounting material for corrosion. Remove corrosion damage.	Specialist
	Visual inspection of the barrier boom for damage and corrosion. Clean the barrier boom and repair paint damage as necessary. Remove corrosion damage.	Specialist
	Visual inspection of additional parts, nesting posts and the pendulum support for damage and corrosion. If necessary, clean additional parts, nesting posts and pendulum support and repair paint damage. Remove corrosion damage.	Specialist
	Where they exist, inspect lenses and mirrors of the light barriers.	Specialist
Every 6 months	Check function of the residual current operated device	Electrical specialist
	Check the barrier casing fastening screws for tight fit. If required, tighten the screws.	Specialist
	Check the screws of the additional parts, pendulum support and nesting post for tight fit. If required, tighten the screws.	Specialist
	Check the barrier boom and flange fastening screws for tight fit. If required, tighten the screws.	Specialist

Maintenance

Interval	Maintenance work	To be carried out by
Every 12 months	Check the barrier's mechanics.	MHTM MicroDrive service specialist
	Check the spring setting of the lever system.	
	Check barrier boom position.	
	Visual inspection of the induction loops and the carriageway for damage.	
	Check the induction loops' function. → See page 142.	
	Check the induction loops. Measure the contact resistance, insulation resistance, and inductance of the induction loops. → See page 61.	
	Where they exist, check the function of additional safety equipment, such as light barriers.	
	Check the barrier's function.	
	Check the parameter settings. → See page 103 et seq.	
	Check the barrier's locking in the position "Closed".	
	Check the advanced warning on barriers with the active function "Traffic lights lead".	
	Check electric cables for damages.	
	Check if all electrical connections are firm.	
	Check signs and labels for legibility.	
	Check foundation fastening.	
The cleaning interval depends on the environmental conditions and the climate.	Cleaning barrier boom.	Specialist
	Clean barrier housing from the inside.	Specialist

Table 60: Maintenance schedule

13 Malfunctions

This chapter describes possible causes of malfunctions and trouble shooting tasks.

Contact your dealer in case of malfunctions that cannot be repaired by means of the following information. Procure spare parts from your dealer or directly from the manufacturer. For the address, see invoice, delivery note or the reverse of these instructions.

13.1 Safety

→ See also safety notes on page 19, chapter 2.6 "Occupational safety and special dangers".

General

⚠ WARNING!

WARNING!
Danger of injury from inappropriate troubleshooting!

Inappropriate troubleshooting can cause severe or lethal injuries.

Therefore:

- All troubleshooting work must be performed by specialists or electrical specialists.
- Observe possible movements of the barrier boom. Defective control may lead to inadvertent movement of the barrier boom.
- Prior to work, ensure that there is sufficient assembly space.
- Pay attention to tidiness and cleanness at the assembly site! Loosely stacked or lying around components and tools are accident sources.
- Deactivate the barrier if any components are damaged, e.g. the barrier boom.
- After completion of troubleshooting, ensure that all covers are correctly mounted.

Malfunctions

Danger of injury after lightning strike

⚠ WARNING!

WARNING!
Danger of injury from total outage or barrier malfunction after lightning has hit the barrier!

If a lightning hit the barrier, this may lead to total outage or malfunction of the barrier. The malfunction may cause unexpected barrier behaviour and thus lead to serious injury!

Therefore:

– If lightning hit the barrier, have an electrician check the barrier for damage and proper function. Repair barrier if required.
– Observe possible movements of the barrier boom. Defective control may lead to inadvertent movement of the barrier boom.

13.2 Malfunction table – barrier malfunctions

→ For requirements to the MHTM MicroDrive service specialist, see page 18, chapter 2.4.1.

Malfunction	Possible cause	Corrective action	To be carried out by
Barrier out of operation. The message "Safety device missing" appears on the display.	No safety loop is connected to the plug-in module "Detector" and no safety light barrier to the clamps X11 and X20.	Connect either the safety loop or safety light barrier. → See page 179, chapter 17.1.	Electrical specialist
	The safety device is defective.	Replace safety device.	
Barrier does not open.	Power supply is not connected	■ Switch on power supply. ■ Check power supply.	Electrical specialist
	Error present. The corresponding error message is displayed.	Depending on error message, check components, wiring, etc.	MHTM MicroDrive service specialist
	Power supply is present. Control unit display does not light up.	Control unit defective. Replace the control unit. Contact service.	MHTM MicroDrive service specialist
	Loop interference due to external loop detectors or other barriers in the proximity.	Check the operating frequency of the loops and adjust if necessary	MHTM MicroDrive service specialist
	Closing signal is active.	Remove closing signal	Electrical specialist

Malfunctions

Malfunction	Possible cause	Corrective action	To be carried out by
Barrier does not open completely.	Spring tension in the balancing springs of the lever system set too weakly for the barrier boom weight.	Adjust balancing springs. → See page 80, chapter 8.13.	MHTM MicroDrive service specialist
Barrier does not close immediately after through traffic, but only after the hold-open time.	Opening signal is active for too long.	Shorten opening signal to max. 1 second.	Electrical specialist
	Safety loop does not respond.	Check the response sensitivity of the safety loop. Adjust setting if necessary.	MHTM MicroDrive service specialist
Barrier does not close.	Opening command is active.	Cancel the opening command.	Electrical specialist
	Induction loop reports engaged, although no vehicles are present.	■ Check and if necessary adjust loop frequencies. ■ Measure loops. Insulation resistance: > 1 Mohm contact resistance: 0.8 to 2.5 ohm Replace loop if the measured values differ from the specified values.	MHTM MicroDrive service specialist
	Wire bridge between terminals X11 IN and OUT missing.	If no safety light barrier is connected, a wire bridge must be installed between the clamps X11 OUT and IN. → See page 179, chapter 17.1.	MHTM MicroDrive service specialist
	Message "Boom contact active": At the "Boom contact" input, boom ejection was detected.	■ Barrier with Swing Away and automatic return: Wait for delay.	Operator
		■ Barrier with Swing Away and manual return: Put barrier boom in the original position manually.	Operator
		■ Barrier without Swing Away: Replace the barrier boom	MHTM MicroDrive service specialist
Barrier does not close. The message "Waiting for release" appears on the display.	The message appears after the voltage supply is switched on, after voltage returns and after reset.	The release signal can be given by an external closing signal or by pushing the left operating button at the control unit. → See page 129, chapter 10.10.8.	Operator

Malfunctions

Malfunction	Possible cause	Corrective action	To be carried out by
Barrier does not close. The message "Waiting for authorization" appears on the display.	The message appears after the voltage supply is switched on, after voltage returns and after reset.	■ The barrier closes once a vehicle passes. → See page 129, chapter 10.10.8. ■ Confirm message via the left button at the control device.	Operator
Barrier does not close completely.	Spring tension in the balancing springs of the lever system set too strongly for the barrier arm weight.	Adjust balancing springs. → See page 80, chapter 8.13.	MHTM MicroDrive service specialist
	Impact was recognized.	Wait several seconds, barrier closes if no obstacle is below the barrier arm anymore.	
Barrier does not close. The display shows: ?	Loop not connected.	Connect loop	MHTM MicroDrive service specialist
	Detector mode incorrectly parameterised.	Check the parameters of the detector module and correct it if necessary. → See page 141, chapter 10.15.	
	Loop defective.	Replace loop.	
	Transfer resistance at the terminals	Cut connecting leads, strip and connect them again without end sleeves.	
Barrier closes, although a vehicle is standing on the safety loop.	Do not select the option "Safety loop" for the parameters "Mode A" or "Mode B" in the menu "Detector 1 (A-B)".	Select option "Safety loop".	MHTM MicroDrive service specialist
	Cut off angle incorrectly parameterised.	Check and adjust the cut off angle.	
	Too low trigger sensitivity set for the loop.	Check the response sensitivity of the loop and adjust if necessary.	
	Inappropriate loop geometry is installed.	Install an appropriate loop geometry.	
	Loop interference due to external loop detectors or other barriers in the proximity.	Check the operating frequency of the loops and adjust if necessary	
	Safety light barrier connected incorrectly or defective.	Check safety light barrier function.	
	User misbehaviour e.g. driving into closing barrier, or following behind another vehicle.	■ Retrofit signal light, such as red/green signal light and parameterise lead time.	
		■ Upgrade signs.	Operator

Table 61: Malfunction table – Barrier

13.3 Warning and interference messages on the display

The control unit display indicates the corresponding warning or error message in case of an error.

Warning messages

Warning messages serve as notice. The barrier continues to operate normally.

Error messages

In case of error messages, the barrier is shut down. For the barrier to be started up again, the error must be removed by an MHTM MicroDrive service specialist and a reset performed pursuant to chapter 13.4.

→ For requirements to the MHTM MicroDrive service specialist, see page 18, chapter 2.4.1.

13.3.1 Warning and interference messages – Logic control (control unit)

Number	Designation	Possible cause	Corrective action
FF01 WARNING	Barrier mechanical fault	The first closing motion could not be performed completely.	■ If required, remove obstacle below the barrier boom. ■ Check barrier mechanics. ■ Check the spring setting of the balancing springs.
FF02 WARNING	Detector safety signal	Communication between logic control and detector module impaired.	■ Perform reset. → See page 165, chapter 13.4. ■ Check plug contacts. ■ Clean plug contacts with spirit. Observe ESD provisions. ■ Replace the control unit.
FF03 ERROR	Safety device missing	No monitoring loop is connected to the detector module and no safety light barrier to the clamps X11 and X20.	Connect either the safety loop or safety light barrier. → See page 179, chapter 17.1.
		Safety device defective	Replace safety device.
		Sensitivity settings in the "Detector" menu too low. Not all vehicles are recognised.	Change sensitivity. → See page 141, chapter 10.15.
FF04 ERROR	Barrier too fast	Spring tension in the balancing springs of the lever system set too weakly for the barrier boom weight.	■ Adjust balancing springs. → See page 80, chapter 8.13. ■ Contact service if required.

Malfunctions

Number	Designation	Possible cause	Corrective action
FF05 WARNING	Book contact / Swing-sway active	At the "Boom contact" input, boom ejection was detected.	■ Barrier with SwingAway and automatic return: Wait for delay. ■ Barrier with SwingAway and automatic return: Put barrier boom in the original position manually. ■ Barriers without Swing Away: Replace the barrier boom ■ If required, choose the option "Without boom locking" in the "Boom locking" menu. ■ Verify cables.
FF06 WARNING	Vandalism	The barrier boom was either lifted from the lower end position or stopped when closing.	In the closed position, check that the lever system latches.
FF30 WARNING	Impact detection	Impact was recognised by the input "external impact contact".	■ Wait for a few seconds. The barrier closes if no obstacle is below the barrier boom anymore. ■ When no obstacle is present below the barrier boom, check input, e.g. contact strip.
3120 ERROR	Mains power failure	Short-term mains outage was recognised	■ Check supply voltage/mains quality
5530 ERROR	EEPROM checksum	Check sum of the parameter incorrect	■ Re-set parameters to factory defaults. → See page 148, chapter 10.18. ■ Contact service if required.
6105 ERROR	Error on homing	The barrier could not perform any reference run.	■ Check motor communication. ■ Check mechanics. ■ Perform reset. → See page 165, chapter 13.4.
8130 WARNING	Heartbeat error	Communication with a plug module was interrupted.	■ Check if all plugged modules are listed in the main menu. ■ Perform reset. → See page 165, chapter 13.4. ■ Contact service if required.

Table 62: Warning and interference messages – logic control (control unit)

13.3.2 Warning and interference messages – Motor GW

Number	Designation	Possible cause	Corrective action
2220 WARNING	Over current	Overcurrent was recognised	■ Warning may appear in connection with impact. ■ If no impact took place, check the cables. ■ Contact service if required.
3211 WARNING	Over voltage	Overvoltage was recognised	■ Warning may appear in connection with impact. ■ If no impact took place, check the cables. ■ Contact service if required.
3221 WARNING	Under voltage	Undervoltage was recognised	■ Warning may appear in connection with impact. ■ If no impact took place, check the cables. ■ Contact service if required.
4210 WARNING	Over temperature	A high temperature was recognised.	■ Check motor temperature via display. The temperature must be below 100 °C. → See page 140, chapter 10.14. ■ Contact service if required.
4220 WARNING	Derating error	Motor power intake is reduced to avoid further temperature increase.	■ Remove impermissible attachments ■ Check the spring setting of the balancing springs. ■ Reduce speed of the barrier boom. ■ Contact service if required.
FF30 WARNING	Impact detection	Impact was recognised.	■ Check safety devices. ■ Adjust menu "Cut off angle". → See page 124, chapter 10.10.3. ■ If there was no impact on an obstacle/vehicle, check the spring settings of the balancing springs and mechanics.
7510 ERROR	Motor communications error	Communication between motor and control impaired or interrupted	■ Verify cables ■ Contact service if required.
FF32 ERROR	HW-Enable-Test failed	–	Contact service.
FF33 ERROR	Safety device test failed (LS-Test failed)	Safety light barrier test failed	Check light barrier and light barrier connection.

Number	Designation	Possible cause	Corrective action
FF37 ERROR	Motor update failed	An error occurred when updating the software	■ Perform reset. → See page 165, chapter 13.4. ■ Contact service if required.
FF3A WARNING	Motor update performed	Message serves information purposes	–

Table 63: Warning and interference messages – Motor GW

13.3.3 Warning and interference messages – detector

Number	Designation	Possible cause	Corrective action
FF4A ERROR	Hardware error	Internal HW function test failed	■ Perform reset. → See page 165, chapter 13.4. ■ Contact service if required.
FF4B WARNING	Loop error A	Short circuit or idle loop A	■ Remove loop error and perform adjustment. ■ If no loop is connected, select the option "Inactive" in the menu "Detector".
FF4C WARNING	Loop error B	Short circuit or idle loop B	■ Remove loop error and perform adjustment. ■ If no loop is connected, select the option "Inactive" in the menu "Detector".
FF4D WARNING	Loop error C	Short circuit or idle loop C	■ Remove loop error and perform adjustment. ■ If no loop is connected, select the option "Inactive" in the menu "Detector".
FF4D WARNING	Loop error D	Short circuit or idle loop D	■ Remove loop error and perform adjustment. ■ If no loop is connected, select the option "Inactive" in the menu "Detector".

Table 64: Warning and Interference Messages - Detector

13.3.4 Warning and interference messages – All modules

Number	Designation	Possible cause	Corrective action
6010 WARNING	Watchdog reset	SW error	Contact service if required.
8110 WARNING	Bus fault	Warning	Contact service if required.
8120 WARNING	Bus HW fault	Warning	■ Check DIP switch next to service interface (position ON) ■ Remove devices at service interface if required.

Table 65: Warning and interference messages – All modules

13.4 Reset the barrier

Control unit reset is performed as follows:

- Switch of power supply and switch it on again after 10 seconds.

or

- Press the two middle control buttons on the display for 5 seconds. → See page 104, Fig. 46.

NOTICE!

NOTICE!
Damage to the unit by too-short switching intervals of the mains voltage!

Therefore:

– To avoid damage to the equipment the power must remain shut off for at least 10 seconds.

13.5 Closing or opening the barrier boom in case of power failure

In case of power failure, the barrier boom may be in the lower or upper dead point. I.e. the barrier boom can no longer be easily moved manually. In this case, proceed as follows:

1. Remove the barrier housing hood.
2. Remove the barrier housing door.
3. Press a tool straight into the upper tool bore. The lever arm is pressed from the dead point
   - Upper tool bore for opening the barrier.
   - Lower tool bore for closing the barrier.
4. Mount the door if applicable.
5. Attach and lock the hood if applicable.

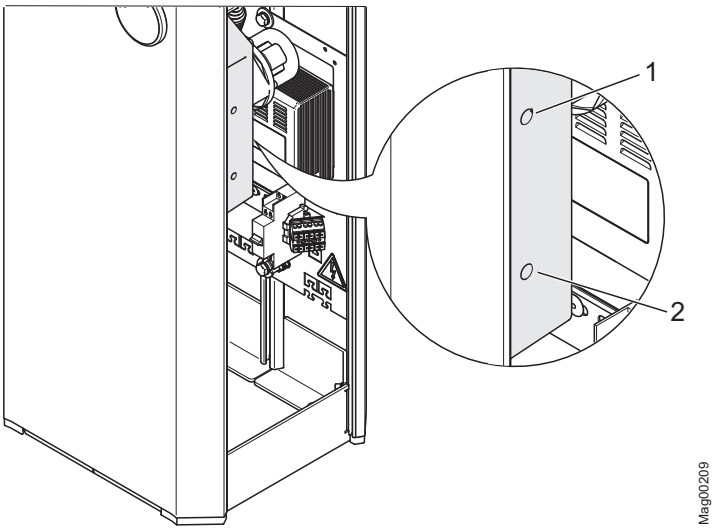

Fig. 56: Top and bottom tool bore

1 Upper tool bore for opening the barrier.
2 Lower tool bore for closing the barrier.

14 Repair

14.1 Safety

→ See also safety notes on page 19, chapter 2.6 "Occupational safety and special dangers".

General

⚠ WARNING!

WARNING!
Danger by inappropriate repair!

Inappropriate repair can cause severe or lethal injuries.

Therefore:

- All repair work must only be performed by authorised MHTM service specialists.
- Prior to work, ensure that there is sufficient assembly space.
- Pay attention to tidiness and cleanness at the assembly site! Loosely stacked or lying around components and tools are accident sources.
- Only use original spare parts or spare parts ap-proved of by MHTMTM MicroDrive barriers.. Procure spare parts from your dealer or directly from the manufac-turer. For the address, see invoice, delivery note or the reverse of these instructions.
- After completion of repair work, ensure that all covers are correctly mounted.

Personal protective equipment

The following must be worn during all repair work:

- Work clothes
- Protective gloves
- Safety shoes
- Protective helmet.

14.2 Spare parts

⚠ WARNING!

WARNING!
Risk of injury by incorrect spare parts!

Incorrect or defective spare parts can result in damage, malfunctions or total failure and also impair safety.

Therefore:

– Use only the manufacturer's original spare parts.

Procure spare parts from your dealer or directly from the manufacturer. For the address, see invoice, delivery note or the reverse of these instructions.

Spare part lists can be obtained on request.

14.3 Replacing the barrier boom

Danger of injury

⚠ CAUTION!

CAUTION!
Danger of injury!

There is a danger of injury when mounting the barrier boom.

Therefore:

– Barrier booms as of a length of 4.5 m must be installed by two persons. We recommend also installing shorter barrier booms with two persons.

14.3.1 Barrier boom type "VarioBoom" and "MicroBoom"

Do not grease

NOTICE!

NOTICE!
Improper lubrication of components, in particular the counter bearing or flange shaft, may lead to damage of the equipment!

Therefore:

– Do not grease the counter bearing and flange shaft.

1. Secure barrier danger area e.g. with barrier tape.
2. Remove the barrier housing hood.
3. Remove the barrier housing door.

WARNING!

Danger of crushing between barrier boom and barrier housing!

4. Switch off power supply. Ensure that the system is powered down. Secure against reactivation.
5. The barrier must be open. Open barrier boom manually if required.
6. Disassemble flange from the flange shaft together with the barrier boom. For this, loosen the 4 hexagon socket screws 10 AF at the flange.
7. Remove the flange with the barrier boom.

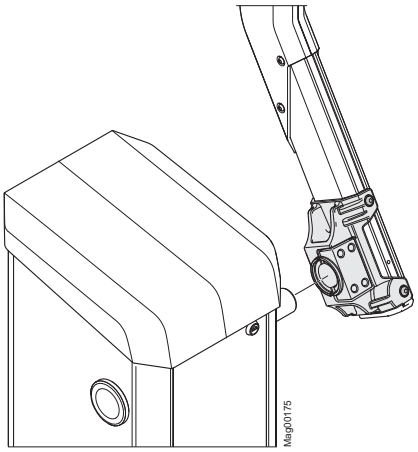

Fig. 57: Disassemble flange with barrier boom

8. Remove flange from the barrier boom. For this, loosen the 4 hexagon socket screws 5 AF at the barrier boom. Use slot nuts for the new barrier boom

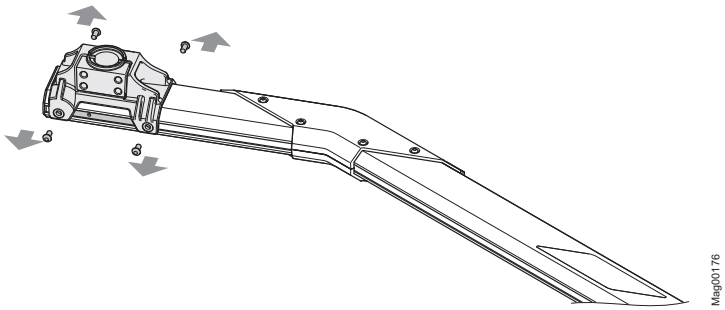

Fig. 58: Disassemble flange

9. Replacing the barrier boom.

10. Remove closing lid from the barrier boom.

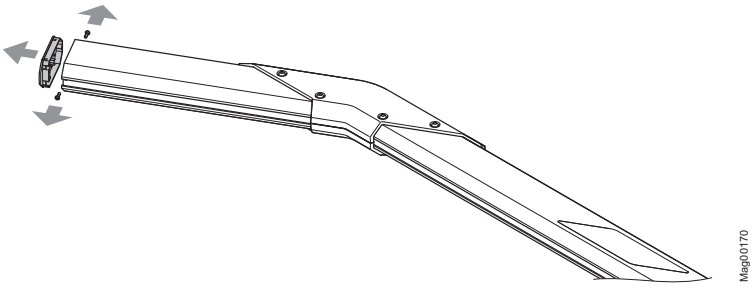

Fig. 59: Disassemble closing lid.

11. Slide a slot nut into the groove at the underside of the barrier boom. Place a slot nut on the upper side of the barrier boom.

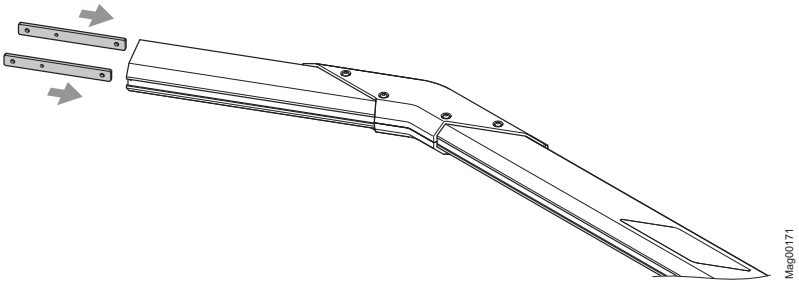

Fig. 60: Assemble slot nuts.

12. Attach the flange with the 4 hexagon socket screw and the two slot nuts to the barrier boom. The shorter protrusion of the flange must point towards the barrier boom end.
    - Torque wrench with hexagon socket: 5 AF
    - Tightening torque: 16 Nm

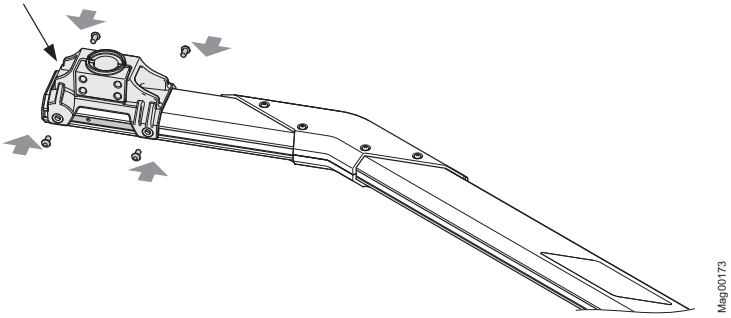

Fig. 61: Assembling flange

13. Install closing lid to the barrier boom.

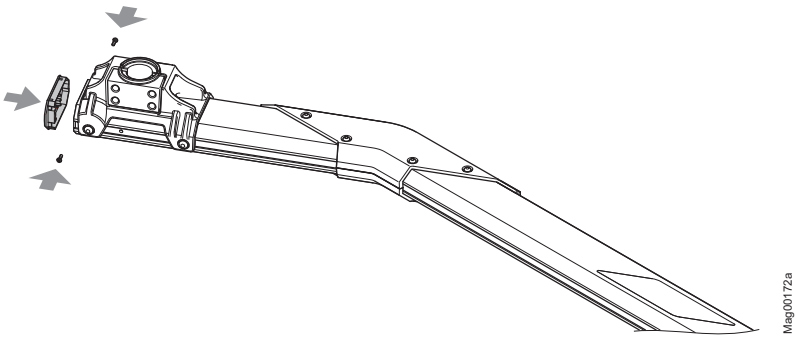

Fig. 62: Install closing lid

14. Push barrier boom with pre-assembled flange onto the flange shaft.
15. Align barrier boom vertically.
16. Install the flange on the flange shaft using the 4 hexagon socket screws. To tighten the screws evenly.
    - Torque wrench with hexagon socket: 10 AF
    - Tightening torque: 75 Nm
17. Close screws and threaded bores with the included grey plastic covers.
18. Push the barrier into the top-most position. The clamping lever must be at the stop for the "open" position. If required, push straight through the upper tool bore with a tool to press the lever arm from the dead point. → See page 166, chapter 13.5.
19. Check the vertical alignment of the barrier boom with a spirit level and correct with the hexagon socket screws at the flange if necessary.
20. Switch on power supply.
21. Switch the "Service" switch on the control unit The LED lights red. The display backlighting flashes.
    → See page 120, chapter 10.7.7 Mode "Service".
22. Close the barrier with the middle right button at the control unit.
23. Check the horizontal alignment of the barrier boom with a spirit level and correct with the hexagon socket screws at the flange if necessary.
24. Switch the "Service" switch on the control unit The LED must light green.
25. Switch off power supply.
26. Install the barrier housing door.
27. Attach and lock the barrier housing hood.
28. Assemble edge protection. → See page 66, chapter 8.7.

14.3.2 Barrier boom type "MicroBoom-T"

1. Secure barrier danger area e.g. with barrier tape.
2. Remove the barrier housing hood.
3. Remove the barrier housing door.

WARNING!

Danger of crushing between barrier boom and barrier housing!

4. Switch off power supply. Ensure that the system is powered down. Secure against reactivation.
5. The barrier must be open. Open barrier boom manually if required.
6. Remove barrier boom. For this, loosen the hexagon screw at the flange.

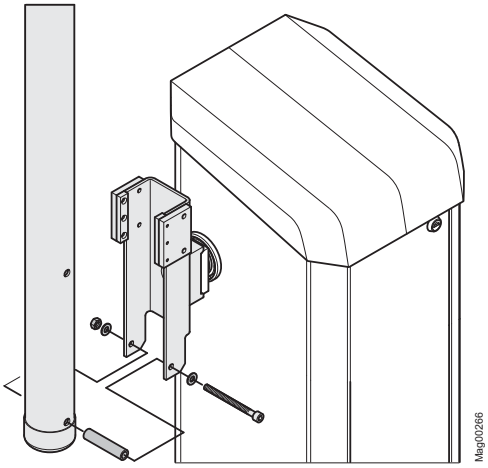

Fig. 63: Remove barrier boom

7. Replacing the barrier boom.
8. Attach the new barrier boom to the flange using the hexagon screw.
9. Push the barrier into the top-most position. The clamping lever must be at the stop for the "open" position. If required, push straight through the upper tool bore with a tool to press the lever arm from the dead point. → See page 166, chapter 13.5.
10. Check the vertical alignment of the barrier boom with a spirit level and correct with the hexagon socket screws at the flange if necessary.

11. Switch on power supply.
12. Switch the "Service" switch on the control unit The LED lights red. The display backlighting flashes.
    → See page 120, chapter 10.7.7 Mode "Service".
13. Close the barrier with the middle right button at the control unit.
14. Check the horizontal alignment of the barrier boom with a spirit level and correct with the hexagon socket screws at the flange if necessary.
15. Switch the "Service" switch on the control unit The LED must light green.
16. Switch off power supply.
17. Install the barrier housing door.
18. Attach and lock the barrier housing hood.

15 Decommissioning, disassembly and disposal

A barrier that is no longer usable should not be recycled as a complete unit, but disassembled into individual components and recycled according to material types. Non-recyclable materials have to be disposed of in an environmental-friendly manner.

- Decommissioning, disassembly and disposal of the barrier may only be carried out by specialised staff.
- Disassemble the barrier in reverse order from assembly.
- The barrier has to be disposed of in accordance with the respective country-specific regulations.

16 EC-Declarations of conformity

16.1 Barrier, pedestrian traffic impossible

Find the EC compliance statement for barriers where pedestrian traffic can be excluded, in the following.

→ See also page 15, chapter 2.1.2.

17 Appendix

17.1 Wiring diagram

Appendix

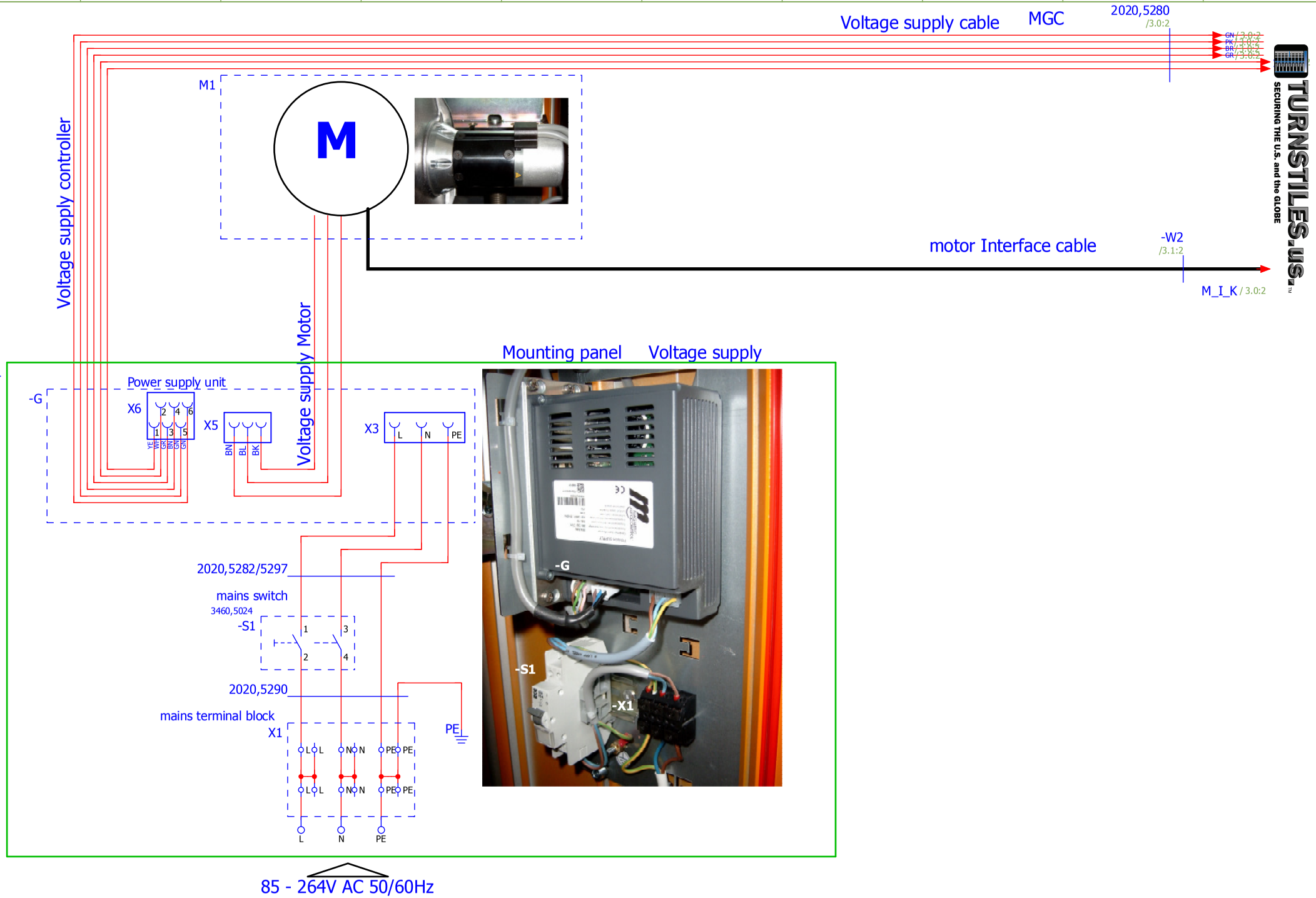

				02.12.2010	MHTM MicroDrive		mains connection Power supply unit	=
				fmeier				+
06	08.11.11	5K11560	gp				5526,0010	Page 2
Version	Date	Modification project	Name	02 5K10565				of 4

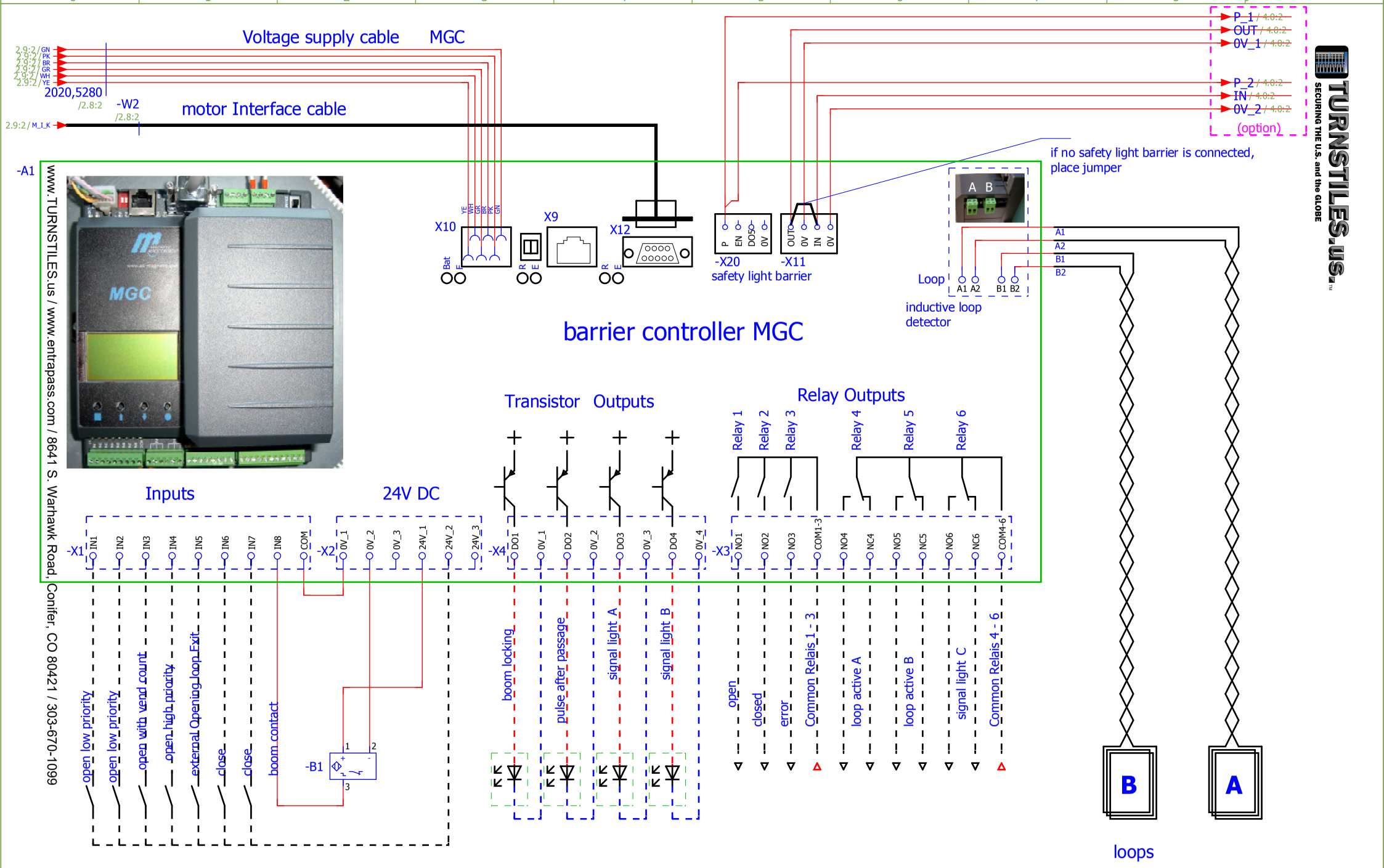

				02.12.2010	MHTM MicroDrive	barrier controller MGC input/output	=
				fmeier			+
06	08.11.11	5K11560	gp			5526,0010	Page 3
Version	Date	Modification project	Name	02 5K10565			of 4

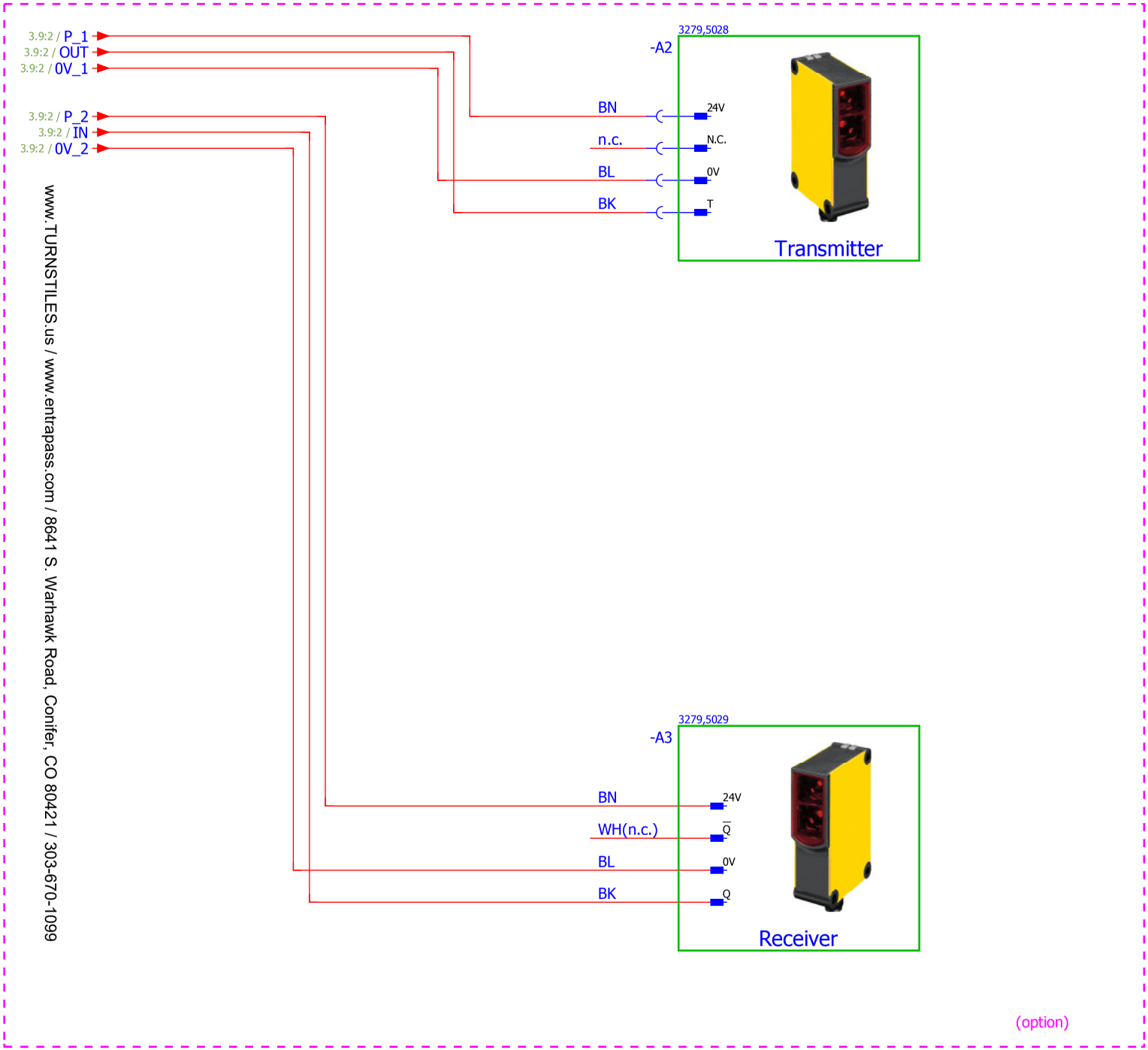

3

				02.12.2010	MHTM MicroDrive		safety-light barriers Option	=
				fmeier				+
06	08.11.11	5K11560	gp				5526,0010	Page 4
Version	Date	Modification project	Name	02 5K10565				of 4

17.2 Menu setup

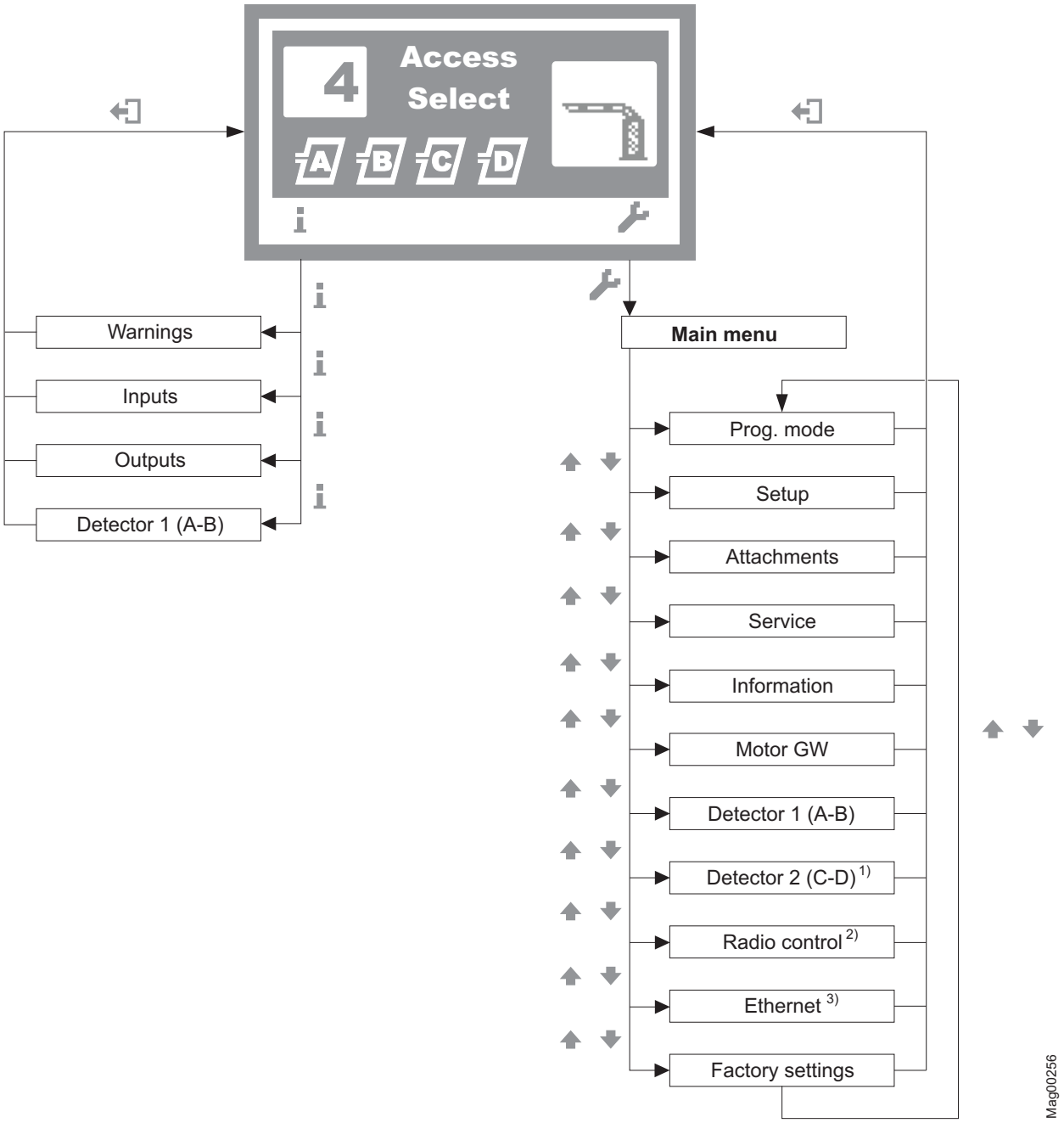

Fig. 64: Menu "Main menu" and "Information"

1 *Menu "Detector 2 (C-D)" with second "Detector" plug-in module only (optional)*
2 *Menu "Radio control" with optional "Radio" plug-in module only*
3 *Menu "Ethernet" with optional "Ethernet" plug-in module only*

Appendix

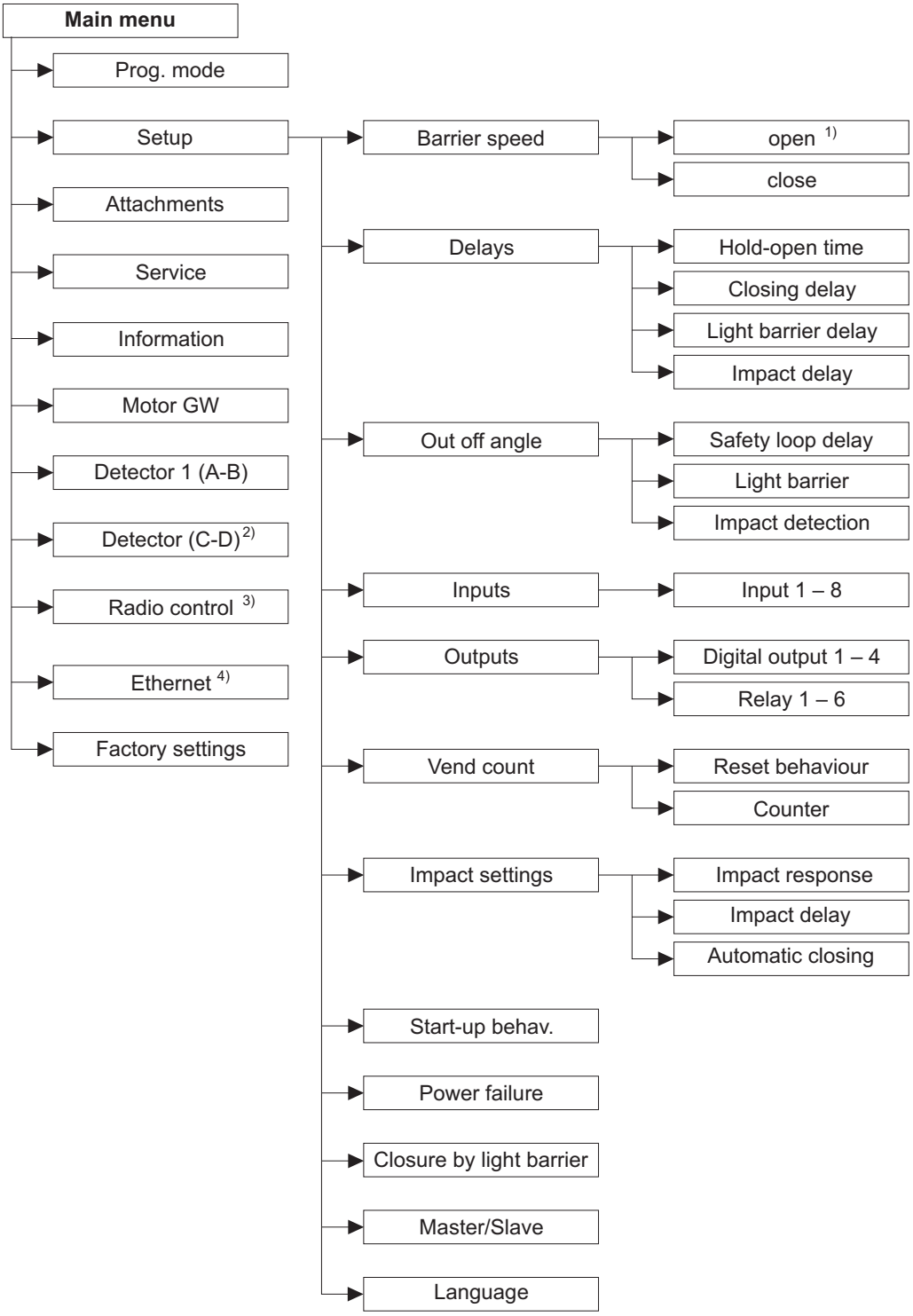

Fig. 65: Menu "Main menu"

1 *The parameter is displayed for the following boom types: Access Pro, Access Pro L, Access Pro H, Access Select and Access Select L, Parking Pro and Parking Select.*
2 *Menu "Detector 2 (C-D)" with second "Detector" plug-in module only (optional)*
3 *Menu "Radio control" with optional "Radio" plug-in module only*
4 *Menu "Ethernet" with optional "Ethernet" plug-in module only*

Appendix

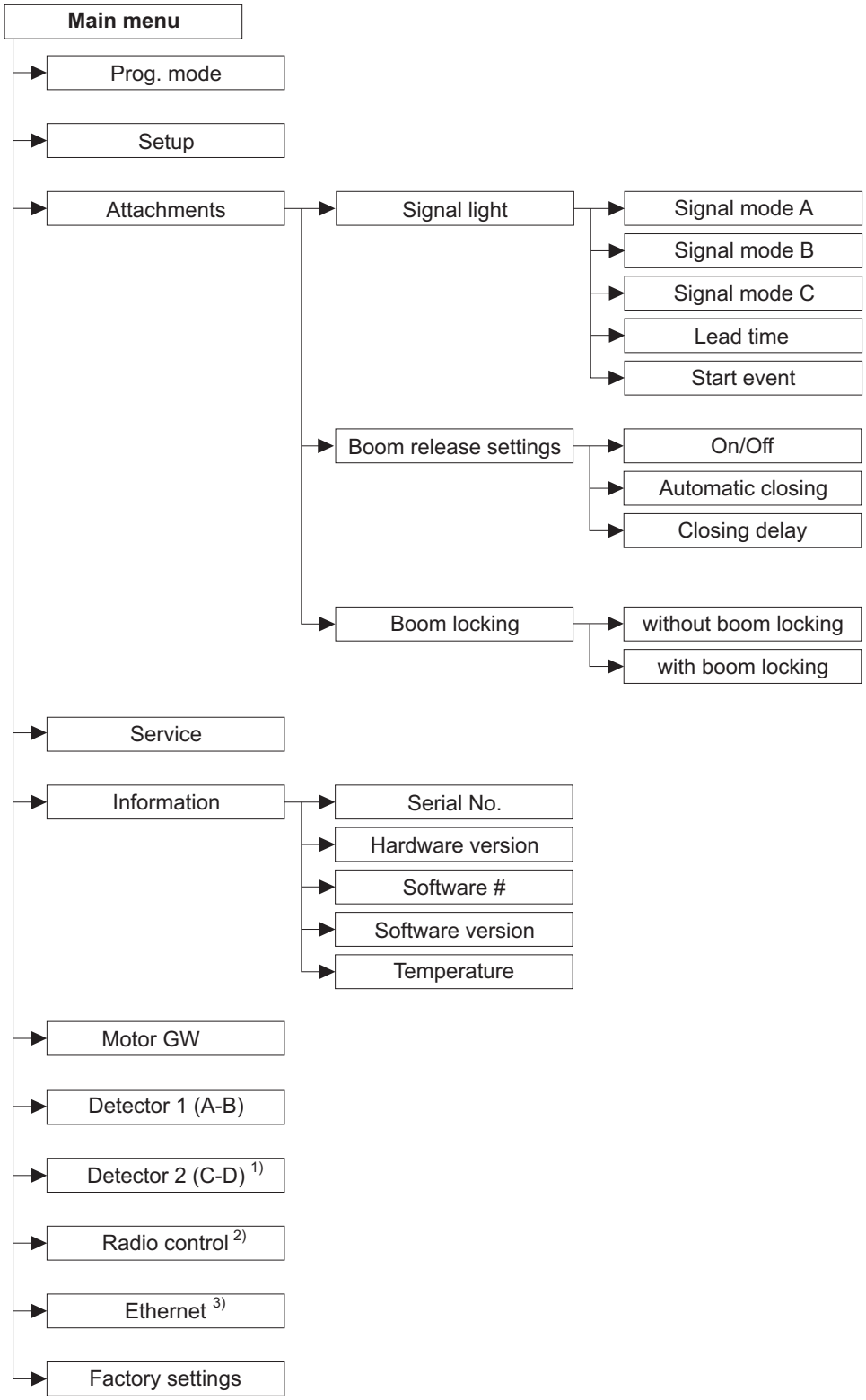

Fig. 66: Menu "Main menu" – Sub menus "Attachments" and "Information"

1 *Menu "Detector 2 (C-D)" with second "Detector" plug-in module only (optional)*
2 *Menu "Radio control" with optional "Radio" plug-in module only*
3 *Menu "Ethernet" with optional "Ethernet" plug-in module only*

Appendix

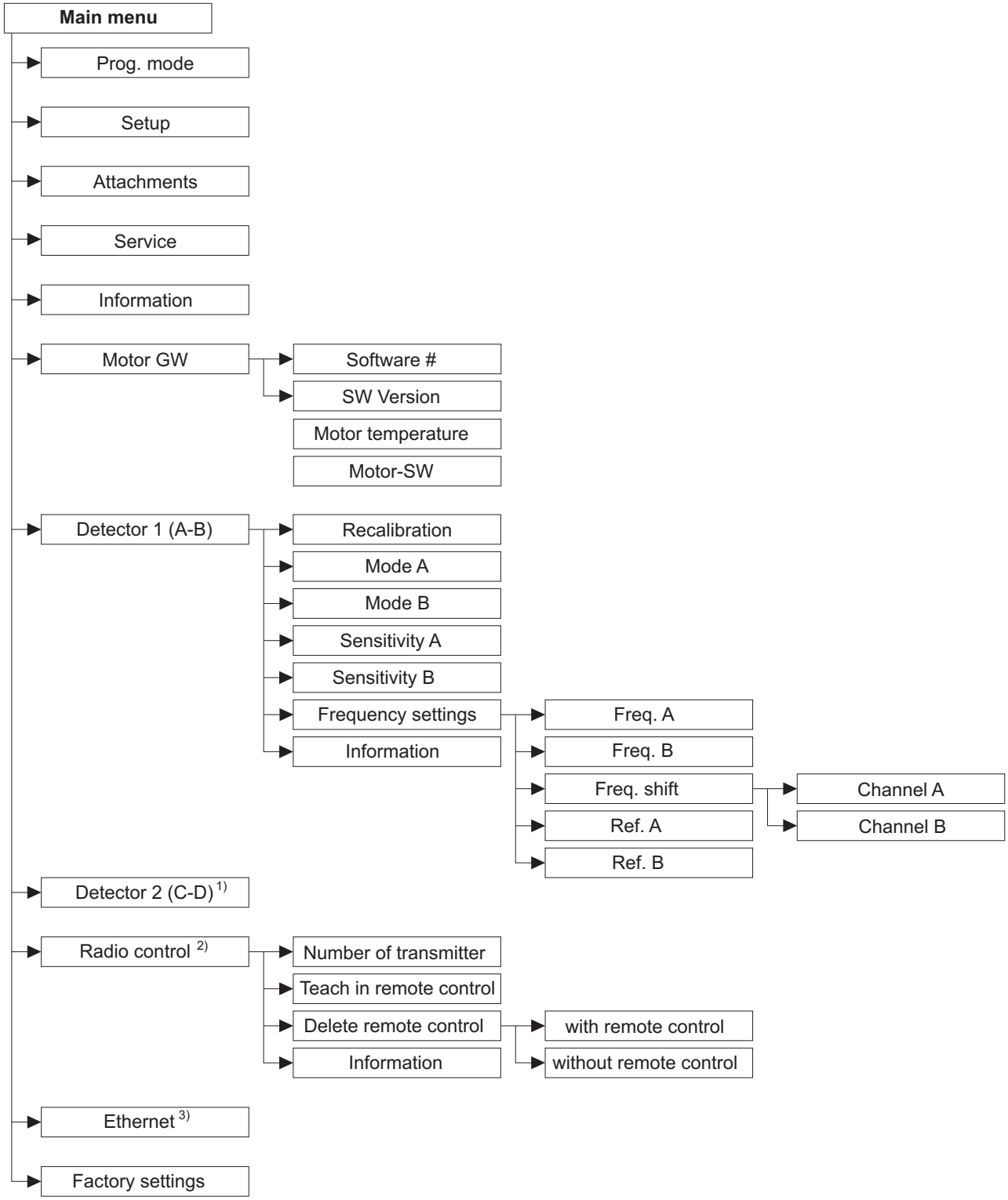

Fig. 67: Menu "Main menu" – Sub menus "Motor GW", "Detector 1 (A–B)" and " Radio control"

1 *Menu "Detector 2 (C-D)" with second "Detector" plug-in module only (optional)*
2 *Menu "Radio control" with optional "Radio" plug-in module only*
3 *Menu "Ethernet" with optional "Ethernet" plug-in module only*

Index

A

Assemble housing 64
Assembly
  Housing 64
  Safety light barrier 67
Assembly and installation
  Required steps 52
Assembly site 54
  Light barrier posts 57
  Nesting post 57

B

Balancing springs 81
  Check 80
  Setting 80
Barrier boom 40, 41, 42
Barrier housing 40, 41, 42
Bistable 113

C

Change value 104
Changes 17
Check
  Assembly 86
  Before to initial start-up 150
  Electrical connection 102
  Installation 86
Check assembly 86
Check installation 86
Cleaning 154
Commissioning 150
Connecting the power cable 89
Control buttons
  Function 105
Control elements 103
Control unit
  Displays 104
  Technical data 38
Control unit control elements 103
Copyright 12
Customer service 13

D

Danger area 27
Deadman 112
Decommissioning 174
  Temporarily 152
Design 40
Digital inputs 95
Digital outputs 97
Dimensions
  Access 30
  Access Pro H 32
  Parking 34
  Toll 36
Disassembly 174
Disclaimer 13
Display
  Symbols 105
Disposal 174

E

EC-Compliance Statement
  Barrier, pedestrian traffic impossible 175
  Barrier, pedestrian traffic not impossible 177
EC-Declaration of conformity 14
Electrical connection 87
Electrical specialists 18
Empty conduit
  Light barrier 58
Empty conduits 54, 55
Environmental protection 14

F

Foundation 40, 41, 42, 54, 55
  Light barrier post 58
  Nesting post 58
Foundation plan 55, 58
Function 43

G

General 10

H

Hazard Notes 20

I

Identification 28
Induction loops 59, 62, 63
Inspection
  During the first start-up 150
Instructed People 18
Intended use 15

L

Limitation of liability 12
Loop detector plug-in module
  Technical data 39
Lorry loops 48
Lorry/passenger car loops 49

Index

M

Maintained contact 111
Maintenance 153
Maintenance schedule 155
Malfunction table 158
Malfunctions 157
Master 134
Menu setup 187
MHTM™ MicroDrive service expert 18
Modifications 17
Motorcycle loops 50
Mounting material
  Requirements 64, 66

N

Nesting post 40, 41
Non-intended use 16

O

Occupational safety 19, 20
Open/Closed button 114
Operating Instructions 10
Operating personnel
  Requirements 18
Operational view 104
Output relay 97

P

Parallel operation 134
Parameterising
  Options 108
  Values 109
Passenger car loops 47, 48, 50
Pendulum support 40, 41
Personal protective equipment 19
Pictogram explanation 11
Programme mode
  Deadman 112
  Maintained contact 111
  Pulse control 113
  Two-pulse control 114
Prohibition signs 86

R

Radio plug-in module
  Technical data 39
Reinforcement 54, 55
Reset barrier 165

S

Safety 15
  Commissioning 149
  Electrical connection 87
  Maintenance 153
  Malfunctions 157
  Operation 149
  Repair 167
  Transport 44
Safety devices
  Plausibility check 92
Safety light barrier 67
Scope of delivery 13
Service switch 120
Setup
  Programme mode 110
Slave 134
Spare parts 168
Specialised staff 18
Specialists
  Requirements 18
Storage 46
Switching off 151
Switching on 151
Symbols
  Control button functions 105
  Current programme mode 107
  Current state of the barrier 106
  Current state of the induction loops 107
  Further 107

T

Technical data 30
Transport 46
Transport inspection 45
Type code 29
Type plate 28

U

Unpacking 64

V

VarioBoom 40

W

Warning notes 11
Warranty 13